Quick Chuck (Hand) Change

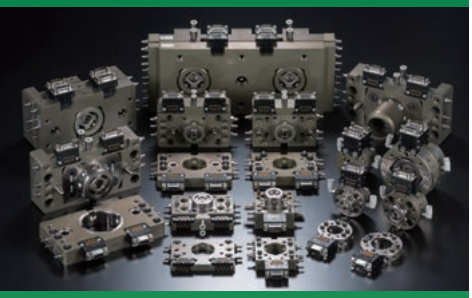

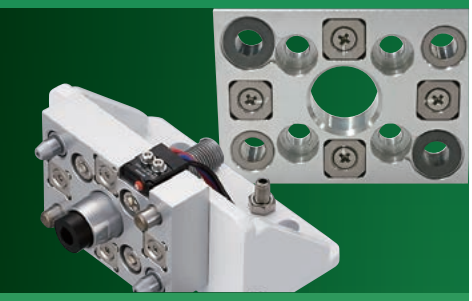

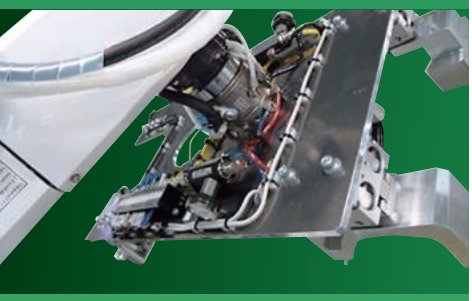

Quick Chuck Change Manual ···· 1-2

- OA-SSL／OA-SSI ／OA1-SA／OA1-SAI ····· 1-3
- OA2-LA／OA-LAI ／Chuck Spacer (Plastic) ····· 1-4
- OA-SSL (SUS)／OA-SSI (SUS)／OC-LA／OC-LAII ··· 1-5

Quick Chuck Change Manual (OM Type) ··· 1-6

- OM Type ····· 1-6

Tool Changer ····· 1-8

- B／BN Type ····· 1-11
- Long Center Guide ····· 1-16
- Additional Air Expansion for A／B／BN Type ····· 1-17
- Accessories for A／B／BN Type ····· 1-18
- Option & Replacement Parts ····· 1-20
- For Articulated Robots ····· 1-24
- Accessories for Articulated Robots ····· 1-30
- Option & Replacement Parts ····· 1-36

Automated Chuck Exchange System ···· 1-40

- Auto Quick Chuck Change Hanger／Hanger Tool ····· 1-41
- Magnet Chuck Hanger ····· 1-42

Quick Chuck Change Manual

Please check the performance table on the web site.

- Switch Robot hands merely by tightening a single screw.
- Using super duralumin material allows excellent weight reduction and superior strength.
- Interchangeable with existing OC series products.

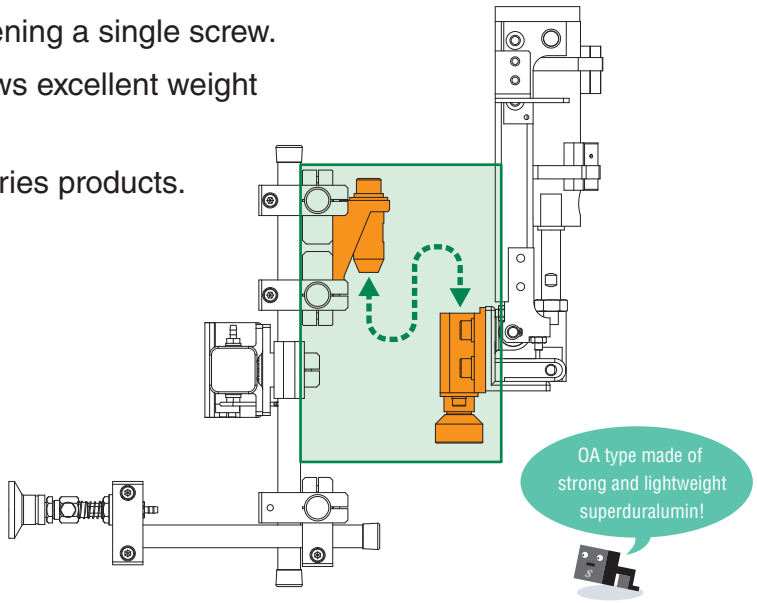

■ Specification

Product name	Order code No. / TYPE	Weight (g)	Weight capacity (kg)	Injection press range (ton)	Page of details
▶ Superduralumin					
Quick chuck change Manual	140219 / OA-SSL	166	～10	40～650	1-3
	140151 / OA-SSI	97			
	140290 / OA1-SA	190	～15		
	140257 / OA1-SAI	228			
▶ Stainless steel (SUS)					
Quick chuck change Manual	140271 / OA-SSL (SUS)	370	～10	40～650	1-5
	140272 / OA-SSI (SUS)	265			

Product name	Order code No. / TYPE	Weight (g)	Weight capacity (kg)	Injection press range (ton)	Page of details
▶ Superduralumin					
Quick chuck change Manual	140291 / OA2-LA	547	～35	650～1,600	1-4
	140155 / OA-LAI	548			
▶ Made of steel					
Quick Chuck Attachment	140042 / OC-LA	1,283	～35	650～1,600	1-5
	140043 / OC-LAII	1,000			
▶ Plastic					
Spacer	041645 / ECP-031	35	–	–	1-4

Allowable-load curve of OA-SSI, OA1-SAI (OC-SAI) (see ➜ 1-4 for comparison between OA-LAI and OC-LAII)

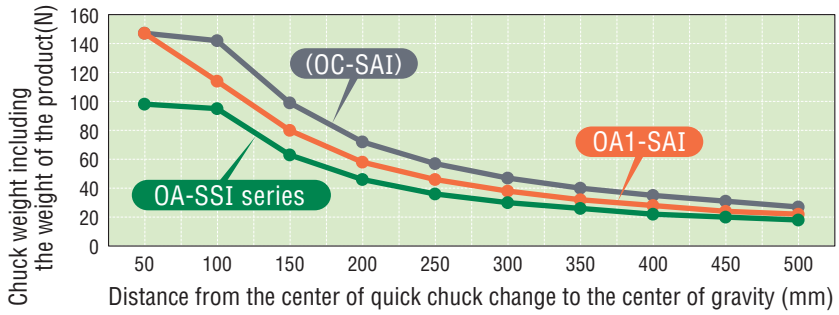

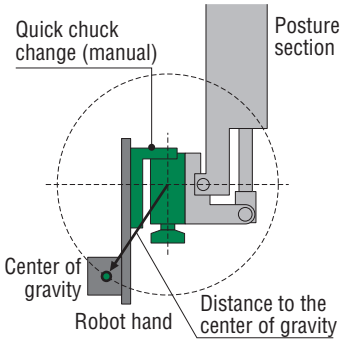

Quick Chuck Change Manual (Super Duralumin)

Switch chucks merely by tightening a single screw.

▶ Mounting bolt for OA-SS was extended.

Robot Side

Order code No.	140219
TYPE	OA-SSL

- Superduralumin
- Weight: 166g
- Mounting position: robot side
- Weight capacity: ～10kg
- Thickness after connection: 24mm

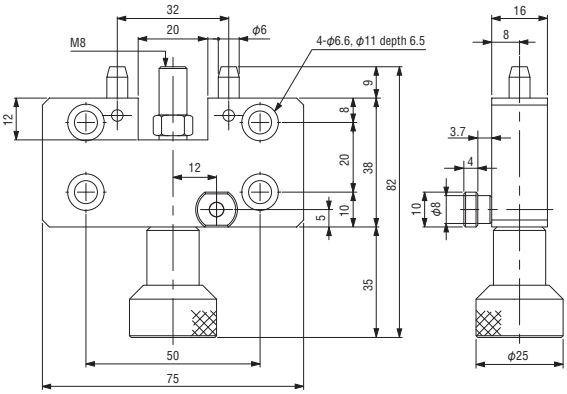

▶ Compatible with OC type QCC for robot side.

Tool Side

Order code No.	140151
TYPE	OA-SSI

- Superduralumin
- Weight: 97g
- Mounting position: tool side
- Weight capacity: ～10kg
- Thickness after connection: 24mm

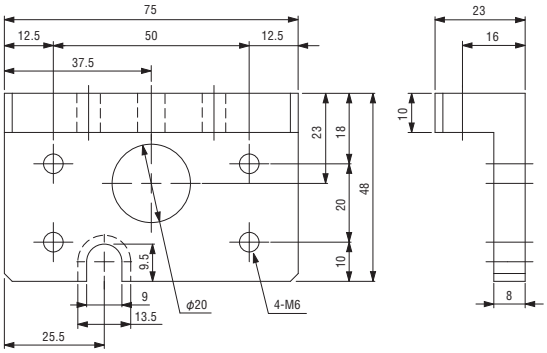

▶ Because it is made of super duralumin, it's lightweight and has excellent rigidity.

Robot Side

Order code No.	140290
TYPE	OA1-SA

- Superduralumin
- Weight: 190g
- Mounting position: robot side
- Weight capacity: ～15kg
- Thickness after connection: 33mm

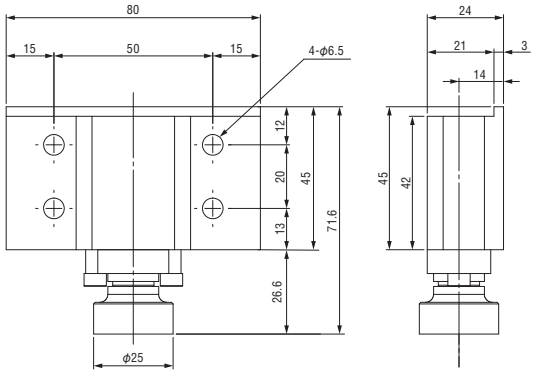

▶ Compatible with OC type QCC for robot side.

Tool Side

Order code No.	140257
TYPE	OA1-SAI

- Superduralumin
- Weight: 228g
- Mounting position: tool side
- Weight capacity: ～15kg
- Thickness after connection: 33mm

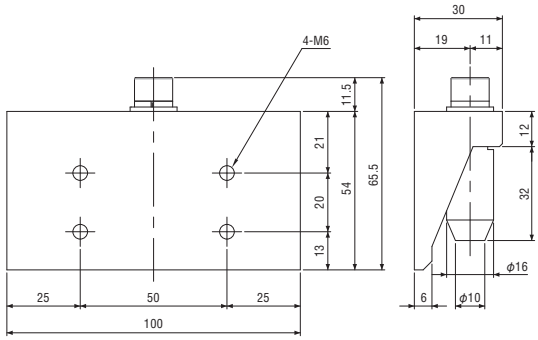

Quick Chuck Change Manual (Super Duralumin) / Chuck Spacer

Switch robot hands merely by tightening a single screw.

▶ Because it is made of super duralumin, it's lightweight and has excellent rigidity. suitable for medium-sized robots.

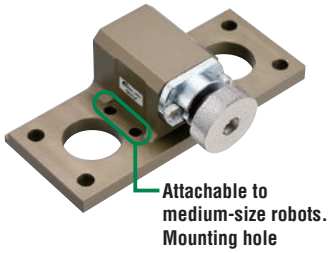

Robot Side

Order code No.	140291
TYPE	OA2-LA

- Superduralumin
- Weight:547g
- Mounting position:robot side
- Weight capacity: ～35kg
- Thickness after connection:61mm

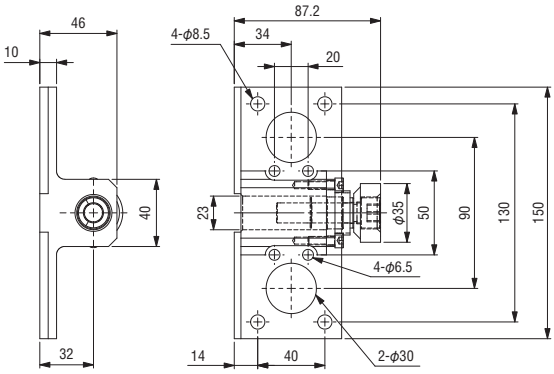

▶ Compatible with OC type for robot side.

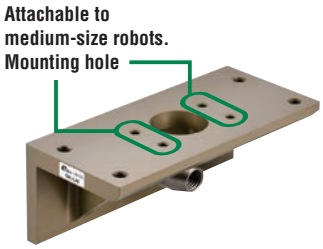

Tool Side

Order code No.	140155
TYPE	OA-LAⅠ

- Superduralumin
- Weight:548g
- Mounting position:tool side
- Weight capacity: ～35kg
- Thickness after connection:61mm

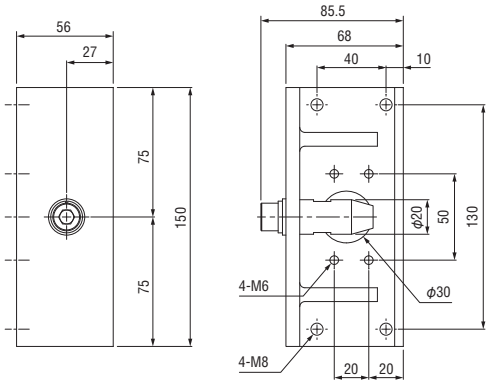

▶ Mounting spacer Use it when changing the height.

Chuck Spacer • Plastic • for chuck

Order code No.	041645
TYPE	ECP-031

- Plastic (polypropylene)
- Weight:35g

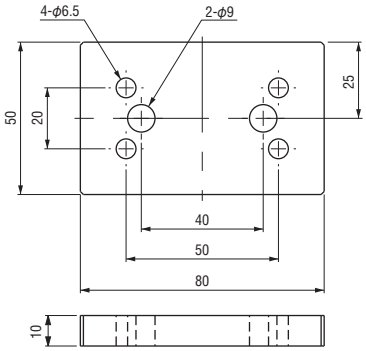

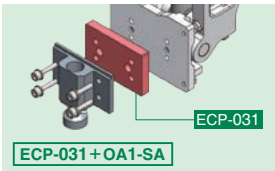

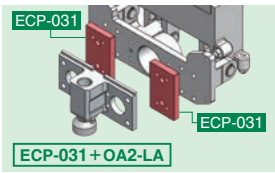

Allowable-load Curve of OA-LAⅠ(with hole), OA-LAⅠ, and OC-LAⅡ

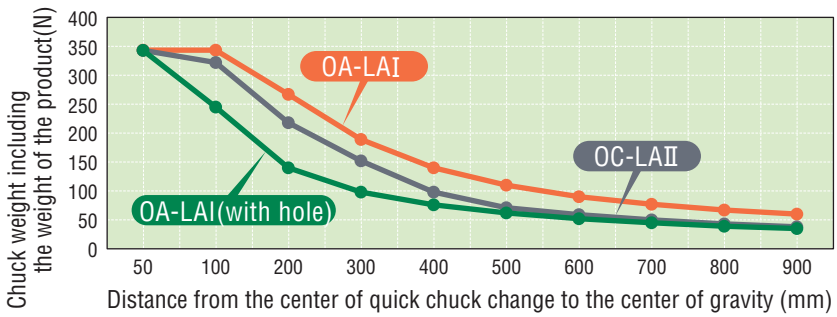

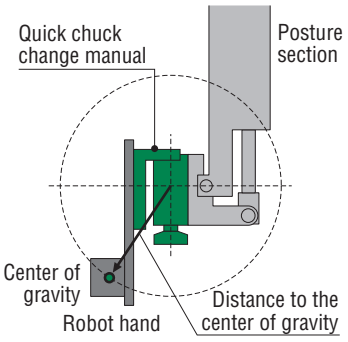

Quick Chuck Change Manual (Stainless) / Quick Chuck Attachment (Steel)

Switch robot hands merely by tightening a single screw.

▶ Robot hands plate stainless steel (SUS) can be used for food and medicinal industries.

Robot Side

Order code No.	140271
TYPE	OA-SSL (SUS)

- Stainless steel
- Weight : 370g
- Mounting position : robot side
- Weight capacity : ～ 10kg
- Thickness after connection : 24mm

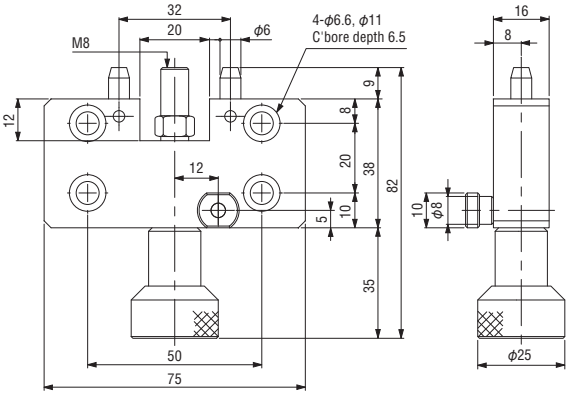

Tool Side

Order code No.	140272
TYPE	OA-SSI (SUS)

- Stainless steel
- Weight : 265g
- Mounting position : tool side
- Weight capacity : ～ 10kg
- Thickness after connection : 24mm

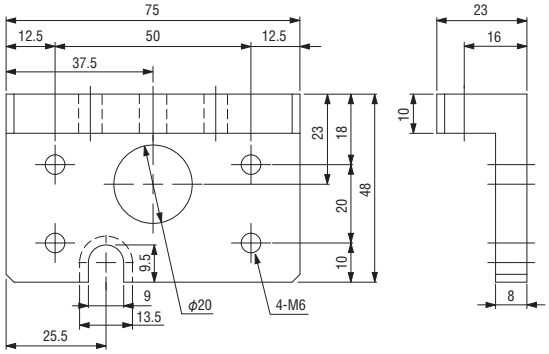

▶ Less deformation and excellent in rigidity.

Robot Side

Order code No.	140042
TYPE	OC-LA

- Steel
- Weight : 1,283g
- Mounting position : robot side
- Weight capacity : ～ 35kg
- Thickness after connection : 59.5mm

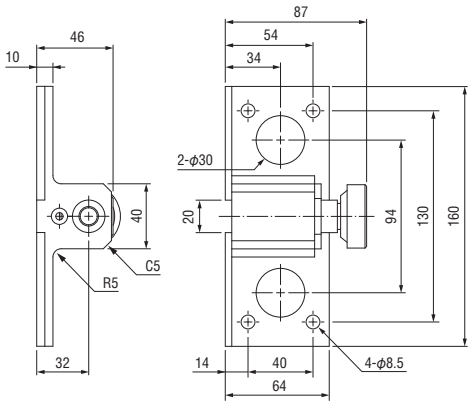

Tool Side

Order code No.	140043
TYPE	OC-LAII

- Steel
- Weight : 1,000g
- Mounting position : tool side
- Weight capacity : ～ 35kg
- Thickness after connection : 59.5mm

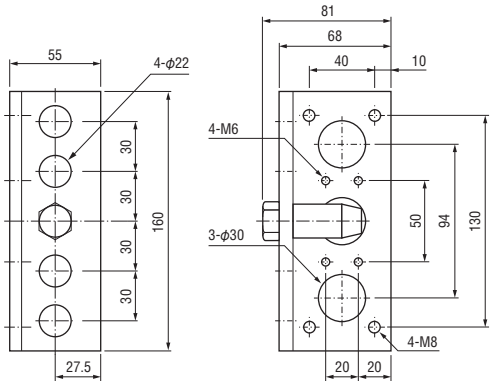

Quick Chuck Change Manual (OM Type)

Please check the performance table on the web site.

- The qcc can be replaced by rotating the locking bolt on the robot side chuck.
- Qcc can help eliminate air connection mistakes.

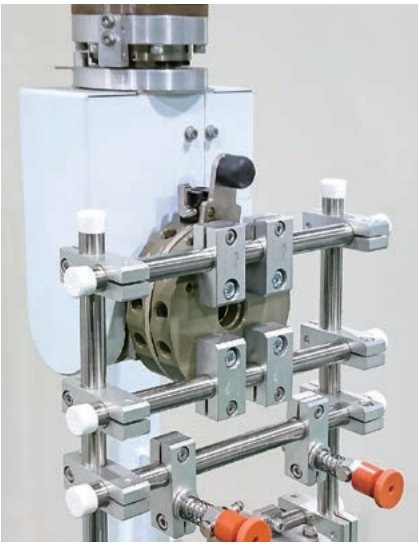

Mounting method

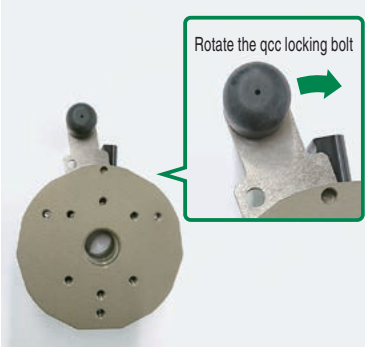

Attach the tool side qcc to the robot qcc by rotating the locking bolt on robot side qcc. Make sure the tool is secure and not loose.

Unlock method

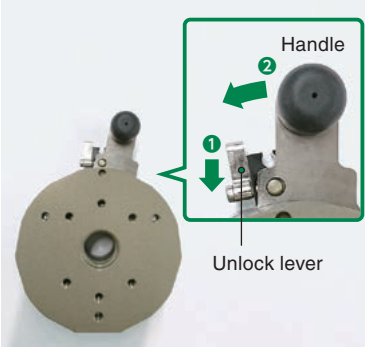

To disengage the lock pin, press the release lever located adjacent to the handle with your finger, and then rotate the handle to the left.

■Specification

Product name	Order code No.	TYPE	Weight (g)	Weight capacity (kg)	Connection pipe	Lever rotation angle	Fixed rotation torque	Unlock rotation torque	Electric contact Connector shape	Fixed pin number	Repeatability and Accuracy
NEW Quick Chuck Change Manual (OM Type)	140382	OM-50	105	～5	4pins (M5)	20°	30N·m	15N·m	9 pin 2A DC24V Max Connector sold separately	3	±0.02
	140383	OM-50Ⅰ	65						11 pin 2A DC24V Max Connector sold separately		
	140384	OM-90	328	～20	6pins (PT1/8)	20°	180N·m	100N·m	16 pin 2A DC24V Max Connector sold separately	3	±0.02
	140385	OM-90Ⅰ	212								

※Check the web site for allowable static load curves. (above the QR code)

Quick Chuck Attachment

NEW

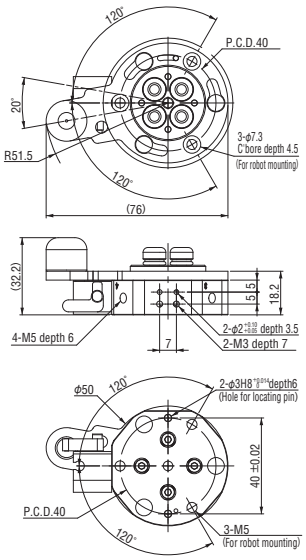

Robot Side

Order code No.	140382
TYPE	OM-50

- Superduralumin
- Weight: 105g
- Mounting position: robot side
- Weight capacity: 5kg
- Thickness after connection: 32.7mm
- Connection pipe: 4 circuits (M5)

NEW

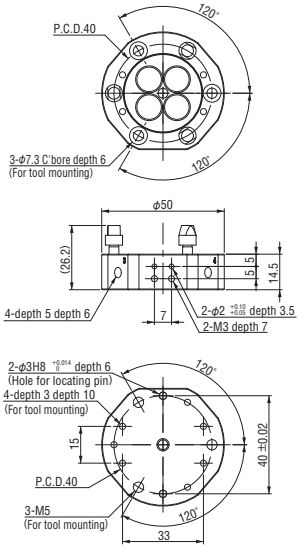

Tool Side

Order code No.	140383
TYPE	OM-50Ⅰ

- Superduralumin
- Weight: 65g
- Mounting position: tool side
- Weight capacity: 5kg
- Thickness after connection: 32.7mm
- Connection pipe: 4 circuits (M5)

Quick Chuck Change Manual (OM Type)

It can be replaced by simply rotating the locking bolt on the robot chuck.

Quick Chuck Change Manual (OM Type)

You can see moving images of products by using QR code reader of your smartphone.

Quick Chuck Attachment

NEW

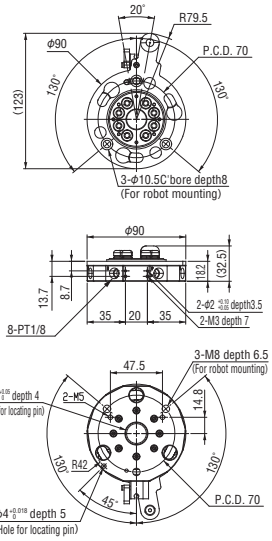

Robot Side

Order code No.	140384
TYPE	OM-90

- Superduralumin
- Weight : 328g
- Mounting position : robot side
- Weight capacity : 20kg
- Thickness after connection : 32.7mm
- Connection pipe : 8 circuits (PT1/8)

Connecter drawing ➡ See 1-33.

NEW

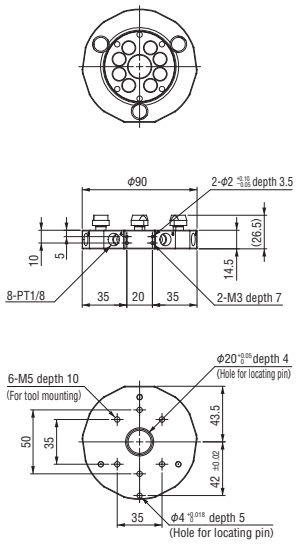

Tool Side

Order code No.	140385
TYPE	OM-90I

- Superduralumin
- Weight : 212g
- Mounting position : tool side
- Weight capacity : 20kg
- Thickness after connection : 32.7mm
- Connection pipe : 8 circuits (PT1/8)

Connector Accessories

D-sub & probe connector	Robot side	Tool Side
Order code No.	140190	140192
TYPE	OXR-DPS09	OXR-DPS09-I
Weight	25g	
Wiring Specification	AWG22	
Electric contact	9 pin (2A)	
Attached screw	Flat head screw with cross recesse M4×10 [123515]	

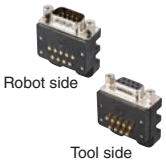

- Connecter drawing ➡ See 1-33

Probe connector (solder)	Robot side	Tool Side
Order code No.	140264	140265
TYPE	OXR-PS16	OXR-PS16-I
Weight	8g	11g
Wiring Specification	AWG22	
Electric contact	16 pin (2A)	
Attached screw	Flat head screw with cross recesse M4×10 [123515]	

- Connecter drawing ➡ See 1-33

Probe connector	Robot side	Tool Side
Order code No.	140362	140363
TYPE	OXR-PSH11	OXR-PSH11-I
Weight	53g	
Wiring Specification	Solder-fix type (AWG23) 500mm	
Electric contact	11 pin (2A)	
Attached screw	Flat head screw with cross recesse M4×10 [123515]	

- Connecter drawing ➡ See 1-33

NEW

Probe connector bracket	
Order code No.	140388
TYPE	OMR-CBX20
Weight	10g

- Accessories : positioning pin, mounting bolt

● It is necessary when attaching the electrical contact connector. (Drawing ➡ 1-33)

Cable Accessories

D-SUB cable •for OX(for OX-B type)	Robot side		Tool Side	
Order code No.	140197	140247	140202	140364
TYPE	OX-DS09S-H	OX-DS09S-H (1.5M)	OX-DS09P-I-H	OX-DS09P-I-H (1.5M)
Weight	60g	138g	60g	140g
Cable length	0.5m	1.5m	0.5m	1.5m
Electric contact	9 pin			
Wiring Specification	Movable cable (AWG22), for UL			

Straight type

- Bending radius (mm) : R46

D-SUB cable •for OX(for OX-B type)	Robot side (L)		Tool Side (L)	
Order code No.	140203	140248	140204	140365
TYPE	OX-DS09SL-H	OX-DS09SL-H (1.5M)	OX-DS09PL-I-H	OX-DS09PL-I-H (1.5M)
Weight	60g	138g	60g	140g
Cable length	0.5m	1.5m	0.5m	1.5m
Electric contact	9 pin			
Wiring Specification	Movable cable (AWG22), for UL			

Type (L)

- Bending radius (mm) : R46

Patent # U.S. 7,559,265 Europe: EP 1 970 170

Tool Changer

"Multifunction of the robot" and "shortening the setup time" are two capabilities of the tool changer. We increase productivity and offer a range of small-quantity items.

【Features】

- The connecting mechanism is the ball locking type, so it's convenient to assemble and disassemble.
- Equipped with "Pull in function" and "detachable function" when assembling and disassembling.
- With air cut-off circuit (stops air supplies when detached).
- Made of Super Duralumin-strong rigidity and long operating life.
- Safety is ensured by "fail safe mechanism (drop prevention)" when air intercepts.

A/B/BN Type

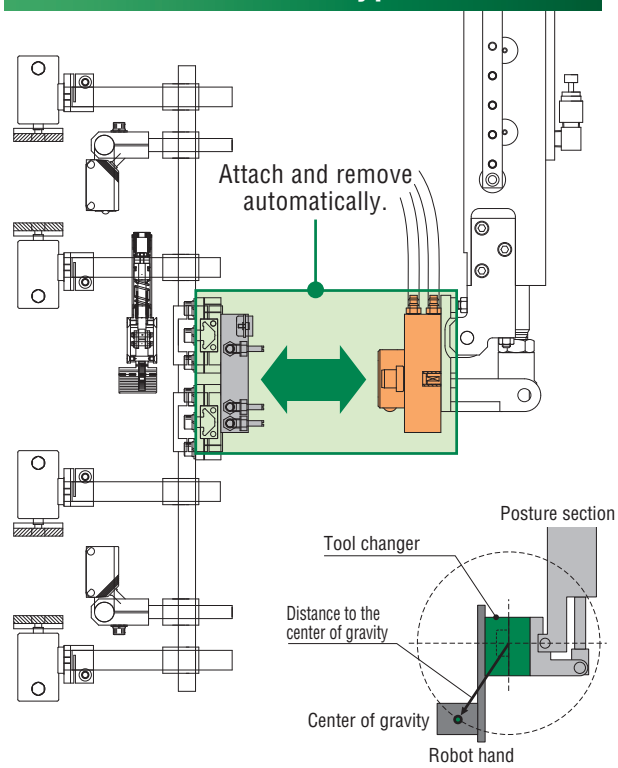

Long Center Guide

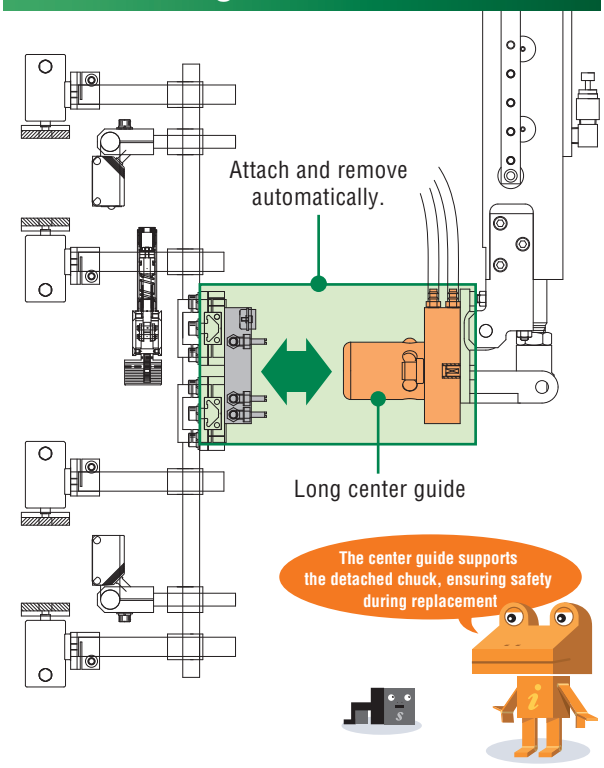

Allowable-load curve of OX-B series

OX-SSB | OX-SBS | OX-SB TYPE | OX-WSB | OX-LB | OX-WLB

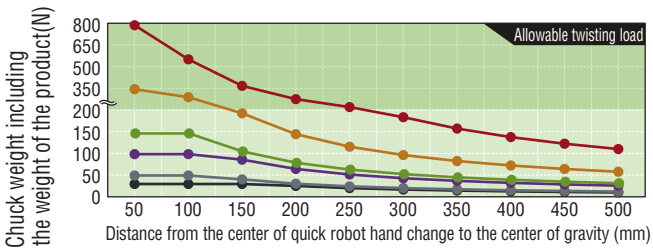

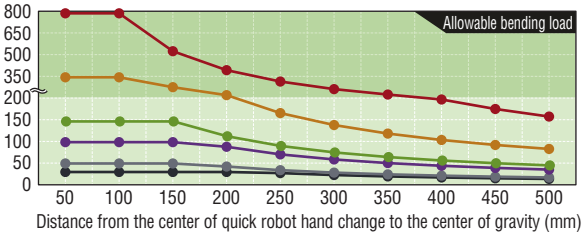

Allowable-load curve of OX-A series

OX-SA | OX-WSA | OX-LA | OX-WLA

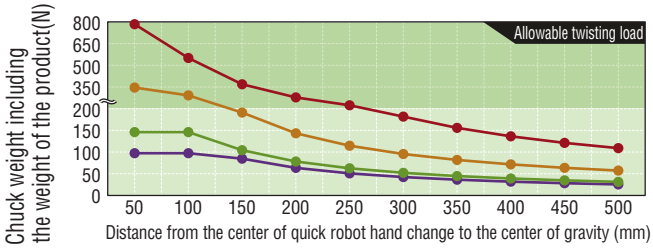

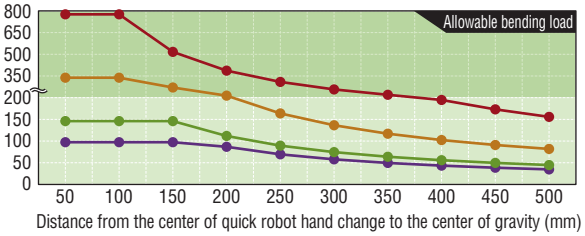

Description of type OX- SB N I

Type (size) — Connector: N (NONE), No (w / connector) — Installation side: None (ROBOT SIDE), I (TOOL SIDE)

Please check the performance table on the web site.

Tool changer

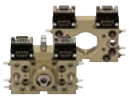

You can see moving images of products by using QR code reader of your smartphone.

Specification

Product name		Order code No.	TYPE	Weight (g)	Weight capacity (kg)	Injection press range (ton)	Allowable bending moment (Nm)	Allowable torsional moment (Nm)	Power to draw(N) / Power to force(N)	Electric contact / Connector shape	Piping connect	Page of details
Tool changer	B type (with connector)	140266	OX-SSB	330	~ 3	40 ~ 80	6.7	5.0	1500 / 480	7Pin×2 1A DC24V Max / Prove connector Solder fixed type	4 port (M5)	1-11
		140268	OX-SSBI	120								
		140181	OX-SB	475	~ 10	80 ~ 650	17.5	12.8	1700 / 550	9Pin×2 2A DC24V Max / D-SUB Connector Prove connector	6 port (M5)	1-11
		140182	OX-SBI	235								
		140299	OX-WSB	845	~ 15	200 ~ 650	22.5	15.7	2,000 / 700		12 port (M5)	1-12
		140301	OX-WSBI	365								
		140183	OX-LB	1,290	~ 35	650 ~ 1,600	41.2	28.7	4,000 / 750		6 port (M5)	
		140186	OX-LBI	615								
		140274	OX-LBF	1,485								1-13
		140273	OX-LBFI	760								
		140184	OX-WLB	2,720	~ 80	1,600 ~ 5,000	78.4	54.8	7,000 / 1,500		10 port (M5)	
		140187	OX-WLBI	1,385								
		140217	OX-SBY	475	~ 10	80 ~ 650	17.5	12.8	1,700 / 500		6 port (M5)	1-14
		140218	OX-SBYI	235								
		140275	OX-SBH	440								
		140276	OX-SBHI	245								
		140233	OX-SBS	305	~ 5	80 ~ 300	8.4	6.0	1,000 / 280	9Pin×1 2A DC24V Max / D-SUB Connector Prove connector		1-15
		140234	OX-SBSI	122								
	B/BN type (w/o connector)	140280	OX-SSBN	318	~ 3	40 ~ 80	6.7	5.0	1,500 / 480	—	6 port (M5)	1-11
		140281	OX-SSBNI	108								
		140225	OX-SBN	431	~ 10	80 ~ 650	17.5	12.8	1,700 / 550			
		140226	OX-SBNI	197								
		140300	OX-WSBN	787	~ 15	200 ~ 650	22.5	15.7	2,000 / 700		12 port (M5)	1-12
		140302	OX-WSBNI	320								
		140231	OX-LBN	1,250	~ 35	650 ~ 1,600	41.2	28.7	4,000 / 750		6 port (M5)	
		140232	OX-LBNI	575								
		140258	OX-LBFN	1,478								1-13
		140259	OX-LBFNI	756								

Please use manual push button "PB1-E (152308), PBW1-E(152306)" for manual exchange (1-18 , 6-11).

Quick Chuck Change
Quick Chuck Change Manual
Quick Chuck Change Manual (OM Type)
Tool Changer
Automated Hand Exchange System
Grip
Mini Cylinder
Accessories for Mini Cylinder
Container Cylinders
Accessories for Container Cylinder
Grippers
Rubber Material / Grip Pad
Suction
Suction Cups
Suction Stems
Pad in Pad
Vacuum Gripper
Air Ejector / Filter / Check Valve
Ultra Small Part Take Out
Vacuum Generator Unit
Cut
Air Nipper (Small-Medium)
Air Nipper (Large)
Frame / Module
Jungle Gym
Let's Joint
Rectangular Tube
Base Aluminum Material
Sliding Chuck
Pneumatic Components / Sensors
Pneumatic Components
Sensors / Multi AND Board
PCIO Communication Unit
Lightweight Parts Series
Frame / Suction / Resin Cylinders / Pads / Resin Manifolds
By Industry
Logistics - Palletizing / Sheet Metal - Stamping - Metal Fabrication
Assembling Tools
Tool / Jig
Information
Various Products Information

Description of type OX- SB N I

Type (size) — Connector — Installation side

Installation side: None (ROBOT SIDE), I (TOOL SIDE)

Connector: N (NONE), No (w / connector)

Please check the performance table on the web site.

■ Specification

Product name			Order code No.	TYPE	Weight (g)	Weight capacity (kg)	Injection press range (ton)	Allowable bending moment (Nm)	Allowable torsional moment (Nm)	Power to draw(N) / Power to force(N)	Electric contact / Connector shape	Piping connect	Page of details
Tool changer	B/BN type (w/o connector)		140277	OX-WLBN	2,680	~ 80	1,600 ~ 5,000	78.4	54.8	7,000 / 1,500	—	10 port (M5)	1-13
			140278	OX-WLBNI	1,345								
			140229	OX-SBYN	435	~ 10	80 ~ 650	17.5	12.8	1,700 / 550		6 port (M5)	1-14
			140230	OX-SBYNI	195								
			140260	OX-SBHN	399								
			140261	OX-SBHNI	202								
	Long center guide (with connector)		140228	OX-LB-30	1,370	~ 35	650 ~ 1,600	41.2	28.7	4,000 / 750	9Pin×2 2A DC24V Max / D-SUB connector Probe connector	6 port (M5)	1-16
			140283	OX-WLB-30	2,905	~ 80	1,600 ~ 5,000	78.4	54.8	7,000 / 1,500	9Pin×2 2A DC24V Max / D-SUB connector	10 port (M5)	
	Long center guide (w/o connector)		140345	OX-SBN-30	470	~ 10	80 ~ 650	17.5	12.8	1,700 / 550	—	6 port (M5)	
			140279	OX-LBN-30	1,330	~ 35	650 ~ 1,600	41.2	28.7	4,000 / 750		6 port (M5)	
			140267	OX-WLBN-30	2,865	~ 80	1,600 ~ 5,000	78.4	54.8	7,000 / 1,500		10 port (M5)	

Please use manual push button "PB1-E (152308), PBW1-E(152306)" for manual exchange (1-18 , 6-11).

■ Common specification

Positional reproduction Accuracy	Used air pressure	Drive piping	Acceptable electric wiring	Allowable temperature/humidity range
±0.02mm*1	0.5~0.7MPa	Clean air, piping of ϕ6 (ϕ4*2), double action type	AWG20 Max.	0℃ -55℃, 0% -95% (w/o condensation)

*1 Based on our measurement
*2 ϕ4 : OX-SB series (SSB, SB, SBY, SBH, SBS, SBN, SBYN, SBHN)

Features

- Original detachable mechanism (The U.S. US: 7,559,265 Europe: EP 1 970 170)
- Fail-safe mechanism (Prevention of falling off)
- Air check valve

Merits

- Reduction of setup change time
- Reproducibility of mounting position
- Prevention of different piping/ wiring connection

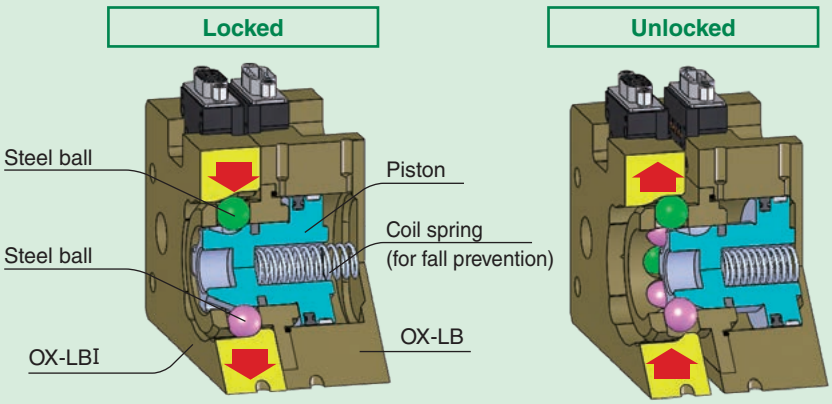

B/BN Type

The chuck on the robot and carrier loader can be easily replaced in a short time.

Weight capacity 3kg Type

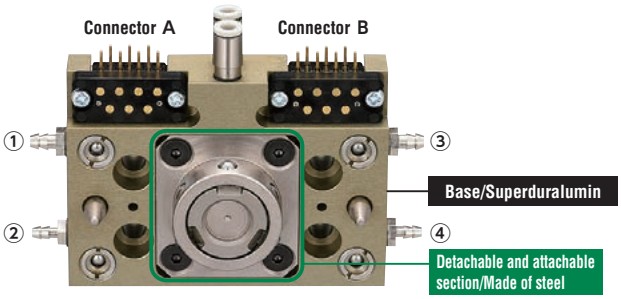

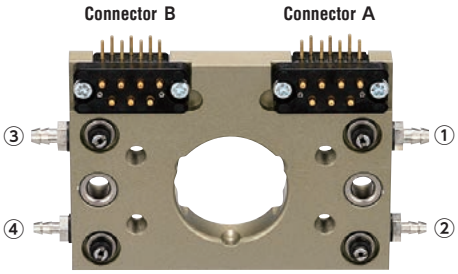

Robot Side

Order code No.	140266
TYPE	OX-SSB

- Weight: 330g
- Mounting position: robot side
- Weight capacity: ~ 3kg
- Thickness after connection: 29mm

W/o connector

Order code No.	140280
TYPE	OX-SSBN

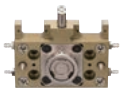

- Weight: 318g
- Mounting position: robot side
- Weight capacity: ~ 3kg
- Thickness after connection: 29mm

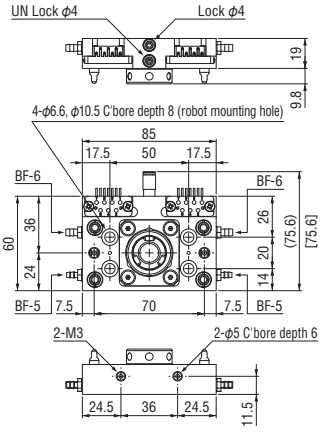

∗The value in [ ] shows the type w/o connector.

Tool Side

Order code No.	140268
TYPE	OX-SSBI

- Superduralumin
- Weight: 120g
- Mounting position: tool side
- Weight capacity: ~ 3kg
- Thickness after connection: 29mm

W/o connector

Order code No.	140281
TYPE	OX-SSBNI

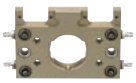

- Superduralumin
- Weight: 108g
- Mounting position: tool side
- Weight capacity: ~ 3kg
- Thickness after connection: 29mm

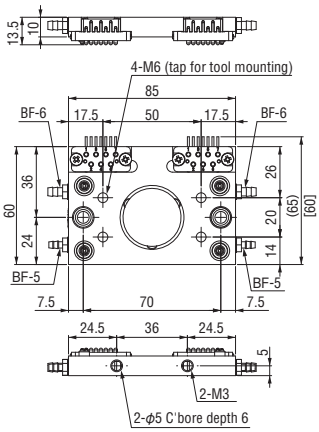

∗The value in [ ] shows the type w/o connector.

Weight capacity 10kg Type

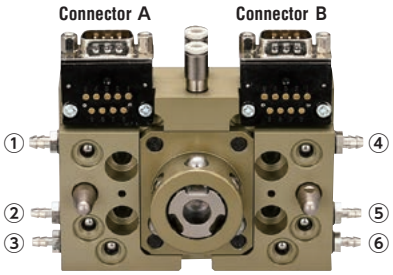

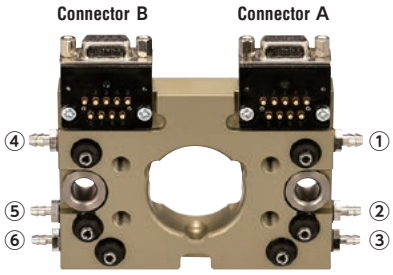

Robot Side

Order code No.	140181
TYPE	OX-SB

- Superduralumin
- Weight: 475g
- Mounting position: robot side
- Weight capacity: ~ 10kg
- Thickness after connection: 40mm

W/o connector

Order code No.	140225
TYPE	OX-SBN

- Superduralumin
- Weight: 431g
- Mounting position: robot side
- Weight capacity: ~ 10kg
- Thickness after connection: 40mm

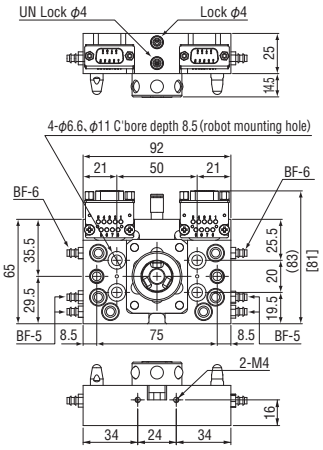

∗The value in [ ] shows the type w/o connector.

Tool Side

Order code No.	140182
TYPE	OX-SBI

- Superduralumin
- Weight: 235g
- Mounting position: tool side
- Weight capacity: ~ 10kg
- Thickness after connection: 40mm
- Can be installed on OX-SBY

W/o connector

Order code No.	140226
TYPE	OX-SBNI

- Superduralumin
- Weight: 197g
- Mounting position: tool side
- Weight capacity: ~ 10kg
- Thickness after connection: 40mm
- Can be installed on OX-SBY

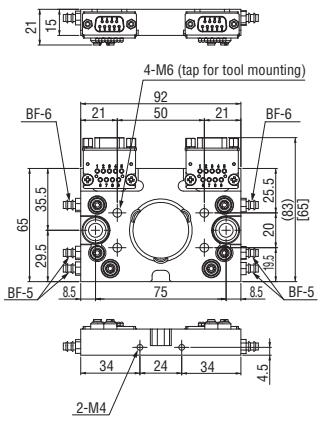

∗The value in [ ] shows the type w/o connector.

B/BN Type

Weight capacity 15kg Type

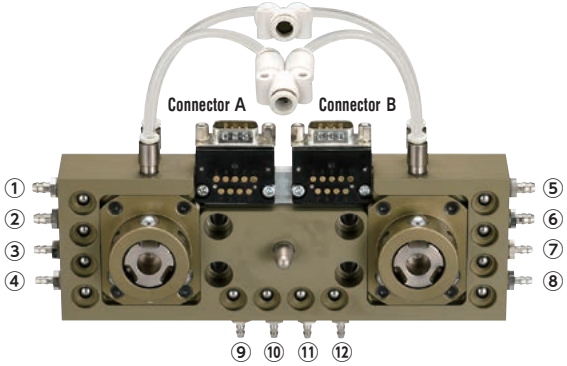

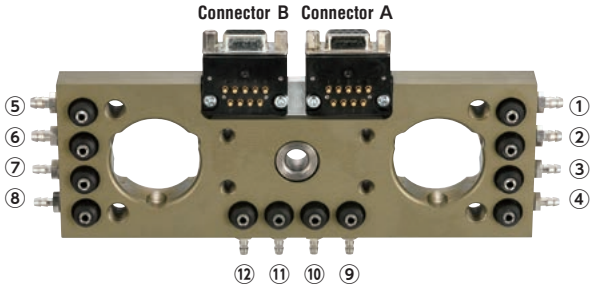

Robot Side

Order code No.	140299
TYPE	OX-WSB

- Superduralumin
- Weight: 845g
- Mounting position: robot side
- Weight capacity: ～15kg
- Thickness after connection: 39mm

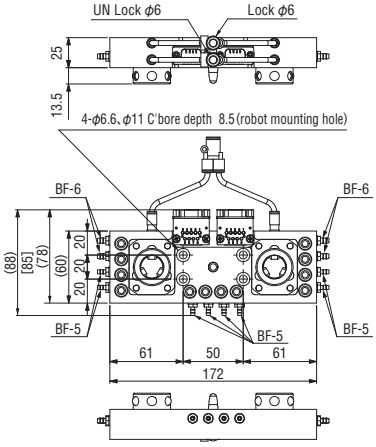

W/o connector

Order code No.	140300
TYPE	OX-WSBN

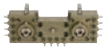

- Superduralumin
- Weight: 787g
- Mounting position: robot side
- Weight capacity: ～15kg
- Thickness after connection: 39mm

＊The value in [ ] shows the type w/o connector.

Tool Side

Order code No.	140301
TYPE	OX-WSBI

- Superduralumin
- Weight: 365g
- Mounting position: tool side
- Weight capacity: ～15kg
- Thickness after connection: 39mm

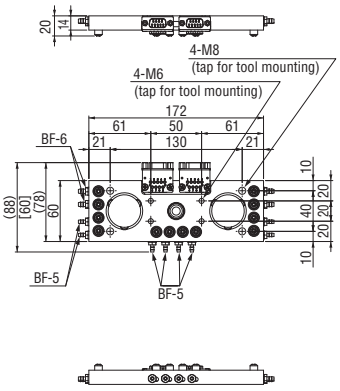

W/o connector

Order code No.	140302
TYPE	OX-WSBNI

- Superduralumin
- Weight: 320g
- Mounting position: tool side
- Weight capacity: ～15kg
- Thickness after connection: 39mm

＊The value in [ ] shows the type w/o connector.

Weight capacity 35kg Type

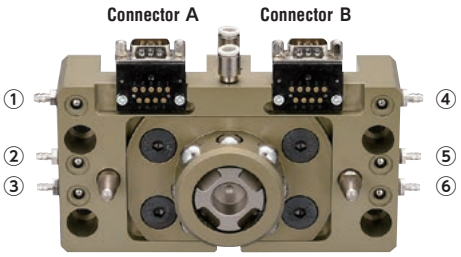

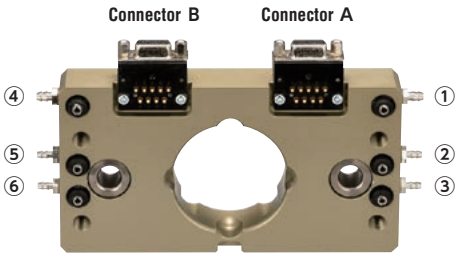

Robot Side

Order code No.	140183
TYPE	OX-LB

- Superduralumin
- Weight: 1,290g
- Mounting position: robot side
- Weight capacity: ～35kg
- Thickness after connection: 60mm

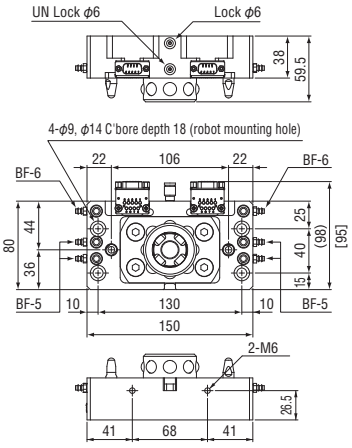

W/o connector

Order code No.	140231
TYPE	OX-LBN

- Superduralumin
- Weight: 1,250g
- Mounting position: robot side
- Weight capacity: ～35kg
- Thickness after connection: 60mm

＊The value in [ ] shows the type w/o connector.

Tool Side

Order code No.	140186
TYPE	OX-LBI

- Superduralumin
- Weight: 615g
- Mounting position: tool side
- Weight capacity: ～35kg
- Thickness after connection: 60mm

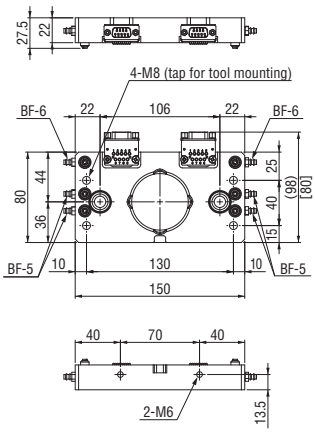

W/o connector

Order code No.	140232
TYPE	OX-LBNI

- Superduralumin
- Weight: 575g
- Mounting position: tool side
- Weight capacity: ～35kg
- Thickness after connection: 60mm

＊The value in [ ] shows the type w/o connector.

Weight capacity 35kg Type

Super duralumin-made frame. Improved durability: steel hybrid structure of detachable and attachable section.

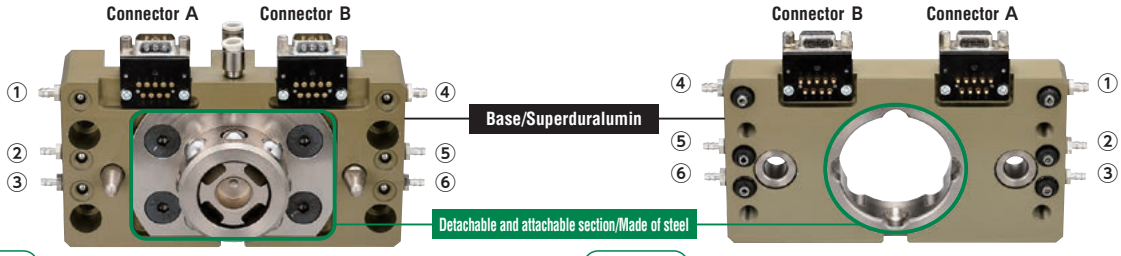

Robot Side

Order code No.	140274
TYPE	OX-LBF

- Weight: 1,485g
- Mounting position: robot side
- Weight capacity: ～35kg
- Thickness after connection: 60mm

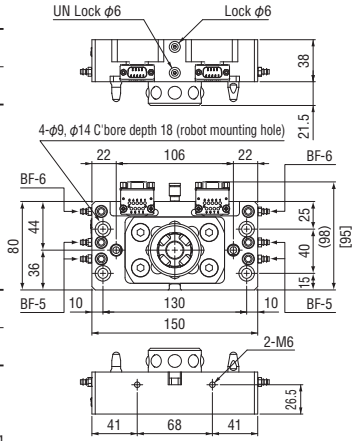

W/o connector

Order code No.	140258
TYPE	OX-LBFN

- Weight: 1,478g
- Mounting position: robot side
- Weight capacity: ～35kg
- Thickness after connection: 60mm

＊The value in [ ] shows the type w/o connector.

Tool Side

Order code No.	140273
TYPE	OX-LBFI

- Weight: 760g
- Mounting position: tool side
- Weight capacity: ～35kg
- Thickness after connection: 60mm

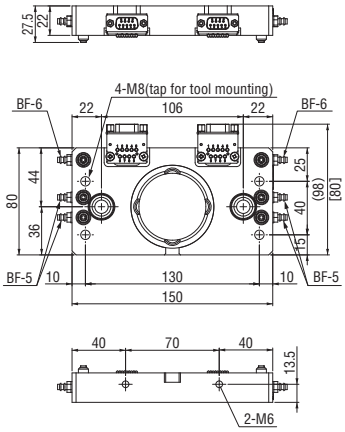

W/o connector

Order code No.	140259
TYPE	OX-LBFNI

- Weight: 756g
- Mounting position: tool side
- Weight capacity: ～35kg
- Thickness after connection: 60mm

＊The value in [ ] shows the type w/o connector.

Weight capacity 80kg Type

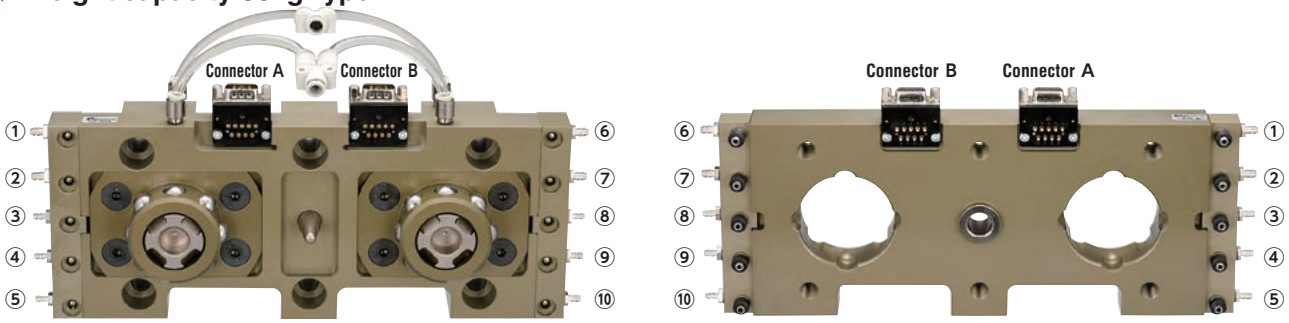

Robot Side

Order code No.	140184
TYPE	OX-WLB

- Superduralumin
- Weight: 2,720g
- Mounting position: robot side
- Weight capacity: ～80kg
- Thickness after connection: 60mm

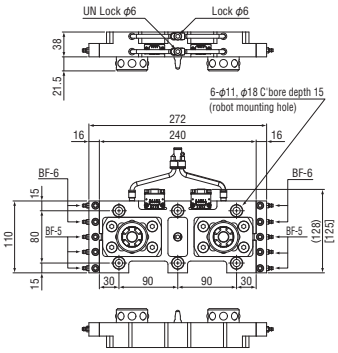

W/o connector

Order code No.	140277
TYPE	OX-WLBN

- Superduralumin
- Weight: 2,680g
- Mounting position: robot side
- Weight capacity: ～80kg
- Thickness after connection: 60mm

＊The value in [ ] shows the type w/o connector.

Tool Side

Order code No.	140187
TYPE	OX-WLBI

- Superduralumin
- Weight: 1,385g
- Mounting position: tool side
- Weight capacity: ～80kg
- Thickness after connection: 60mm

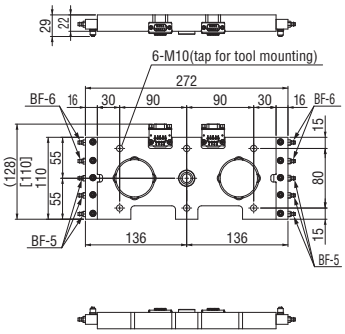

W/o connector

Order code No.	140278
TYPE	OX-WLBNI

- Superduralumin
- Weight: 1,345g
- Mounting position: tool side
- Weight capacity: ～80kg
- Thickness after connection: 60mm

＊The value in [ ] shows the type w/o connector.

Quick Chuck Change
Quick Chuck Change Manual
Quick Chuck Change Manual (OM Type)
Tool Changer
Automated Hand Exchange System
Grip
Mini Cylinder
Accessories for Mini Cylinder
Container Cylinders
Accessories for Container Cylinder
Grippers
Rubber Material / Grip Pad
Suction
Suction Cups
Suction Stems
Pad in Pad
Vacuum Gripper
Air Ejector / Filter / Check Valve
Ultra Small Part Take Out
Vacuum Generator Unit
Cut
Air Nipper (Small-Medium)
Air Nipper (Large)
Frame / Module
Jungle Gym
Let's Joint
Rectangular Tube
Base Aluminum Material
Sliding Chuck
Pneumatic Components / Sensors
Pneumatic Components
Sensors / Multi AND Board
PCIO Communication Unit
Lightweight Parts Series
Frame / Suction / Resin Cylinders / Pads / Resin Manifolds
By Industry
Logistics - Palletizing / Sheet Metal - Stamping - Metal Fabrication
Assembling Tools
Tool / Jig
Information
Various Products Information

B/BN Type

Also compatible with the mounting pattern of cartesian robots made by many other manufacturers.

Weight capacity 10kg Type

Mounting pitch **27×50**

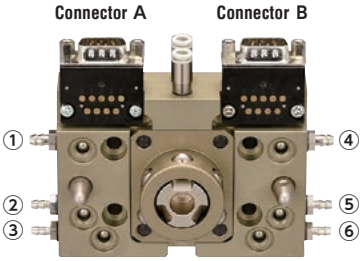

Robot Side

Order code No.	140217
TYPE	OX-SBY

- Superduralumin
- Weight: 475g
- Mounting position: robot side
- Weight capacity: ～10kg
- Thickness after connection: 40mm

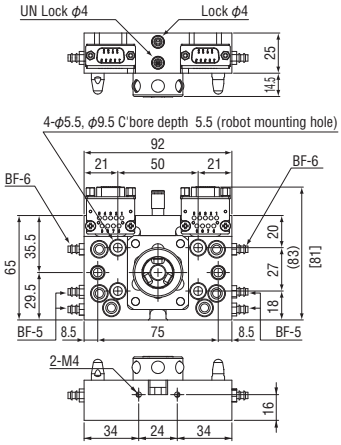

W/o connector

Order code No.	140229
TYPE	OX-SBYN

- Superduralumin
- Weight: 435g
- Mounting position: robot side
- Weight capacity: ～10kg
- Thickness after connection: 40mm

＊The value in [ ] shows the type w/o connector.

Mounting pitch **27×50**

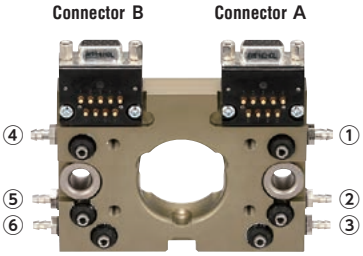

Tool Side

Order code No.	140218
TYPE	OX-SBYI

- Superduralumin
- Weight: 235g
- Mounting position: tool side
- Weight capacity: ～10kg
- Thickness after connection: 40mm
- Can be Installable on OX-SB

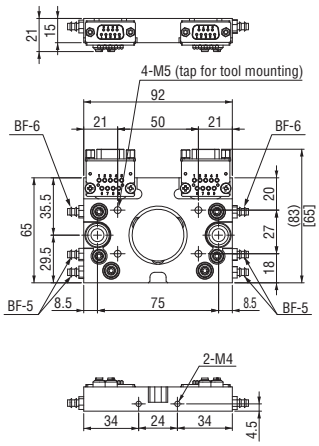

W/o connector

Order code No.	140230
TYPE	OX-SBYNI

- Superduralumin
- Weight: 195g
- Mounting position: tool side
- Weight capacity: ～10kg
- Thickness after connection: 40mm
- Can be Installable on OX-SB

＊The value in [ ] shows the type w/o connector.

Weight capacity 10kg Type

Mounting pitch **40×70**

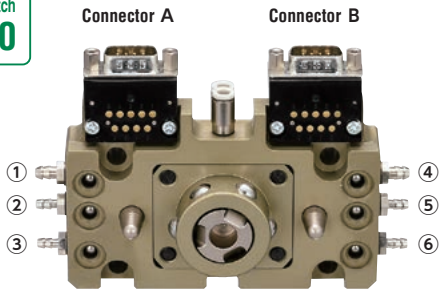

Robot Side

Order code No.	140275
TYPE	OX-SBH

- Superduralumin
- Weight: 440g
- Mounting position: robot side
- Weight capacity: ～10kg
- Thickness after connection: 40mm

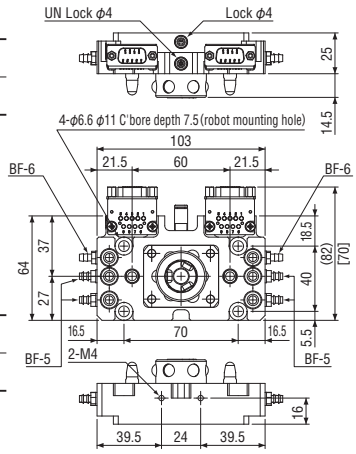

W/o connector

Order code No.	140260
TYPE	OX-SBHN

- Superduralumin
- Weight: 399g
- Mounting position: robot side
- Weight capacity: ～10kg
- Thickness after connection: 40mm

＊The value in [ ] shows the type w/o connector.

Mounting pitch **40×70**

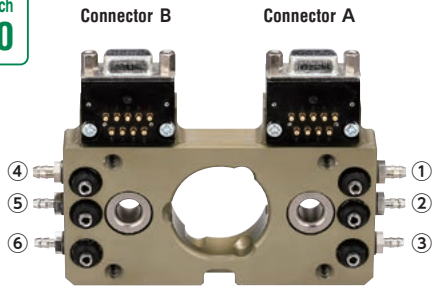

Tool Side

Order code No.	140276
TYPE	OX-SBHI

- Superduralumin
- Weight: 245g
- Mounting position: tool side
- Weight capacity: ～10kg
- Thickness after connection: 40mm

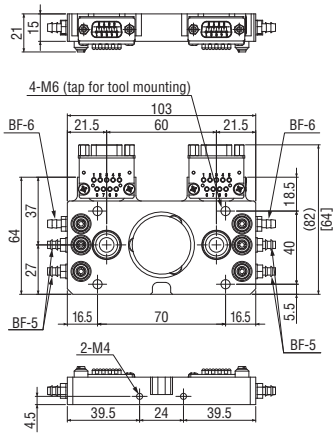

W/o connector

Order code No.	140261
TYPE	OX-SBHNI

- Superduralumin
- Weight: 202g
- Mounting position: tool side
- Weight capacity: ～10kg
- Thickness after connection: 40mm

＊The value in [ ] shows the type w/o connector.

Weight capacity 5kg Type

Mounting pitch
30×26

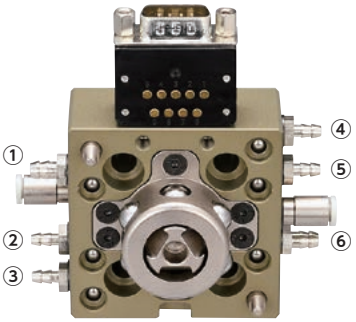

Mounting pitch
30×26

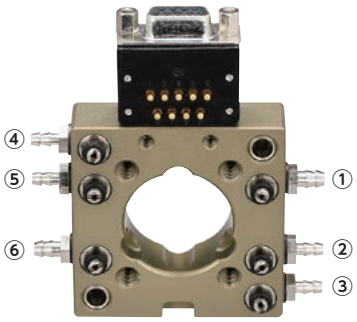

Robot Side

Order code No.	140233
TYPE	OX-SBS

- Superduralumin
- Weight: 305g
- Mounting position: robot side
- Weight capacity: ～ 5kg
- Thickness after connection: 42mm
- The connector used is OXR for articulation

➡ See 1-31

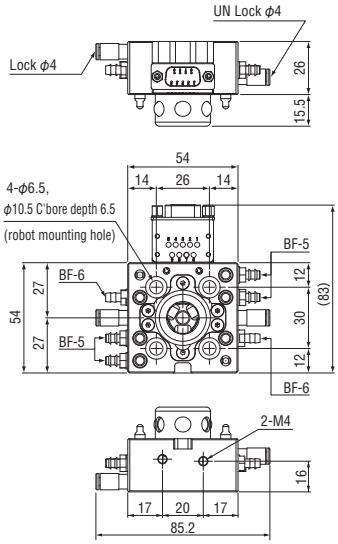

Tool Side

Order code No.	140234
TYPE	OX-SBSI

- Superduralumin
- Weight: 122g
- Mounting position: tool side
- Weight capacity: ～ 5kg
- Thickness after connection: 42mm
- The connector used is OXR for articulation

➡ See 1-31

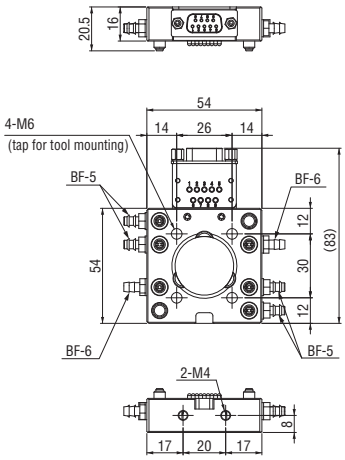

Long Center Guide

Easy exchange of heavy chuck plate with long center guide.

Tool changer
(Long center guide)

You can see moving images of products by using QR code reader of your smartphone.

● Since the center guide comes out of the tool mounting surface about 30 mm in combination, When assembled, the center guide protrudes about 30mm from the tool mounting surface, so it is necessary to be careful about EOAT/Chuck robot hand design.

▶ Weight capacity 10kg Type

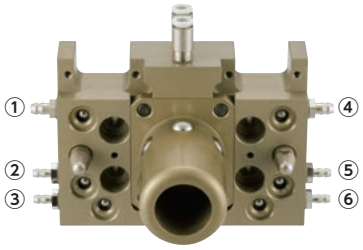

Connected Example

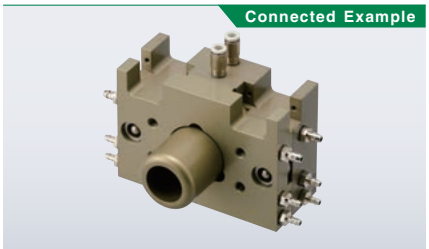

Robot Side

W/o connector

Order code No.	140345
TYPE	OX-SBN-30

- Superduralumin
- Weight : 470g
- Mounting position : robot side
- Weight capacity : ～ 10kg
- Tools : OX-SBNⅠ, OX-SBYNⅠ

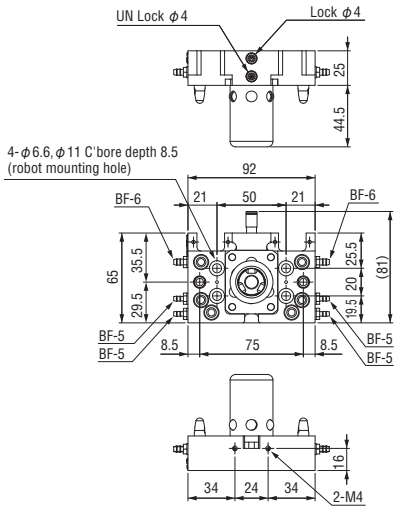

▶ Weight capacity 35kg Type

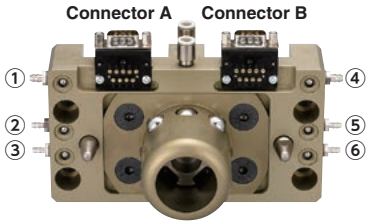

Connected Example

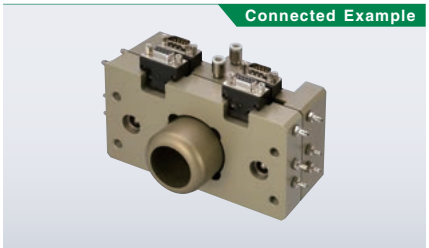

Robot Side

Order code No.	140228
TYPE	OX-LB-30

- Superduralumin
- Weight : 1,370g
- Mounting position : robot side
- Weight capacity : ～ 35kg
- Tools : OX-LBⅠ

W/o connector

Order code No.	140279
TYPE	OX-LBN-30

- Superduralumin
- Weight : 1,330g
- Mounting position : robot side
- Weight capacity : ～ 35kg
- Tools : OX-LBNⅠ

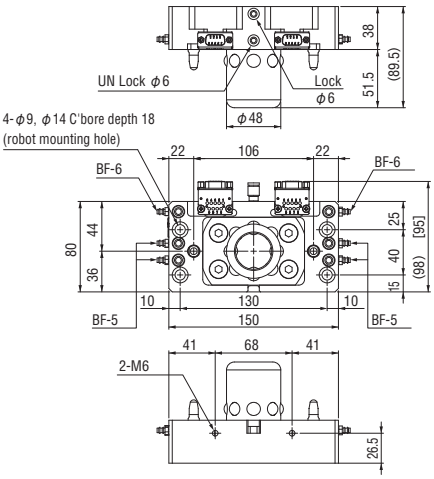

＊The value in [ ] shows the type w/o connector.

▶ Weight capacity 80kg Type

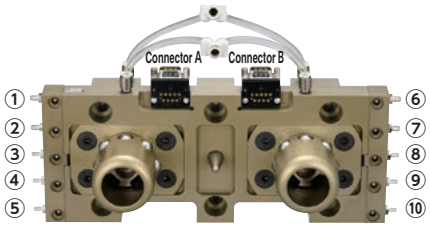

Connected Example

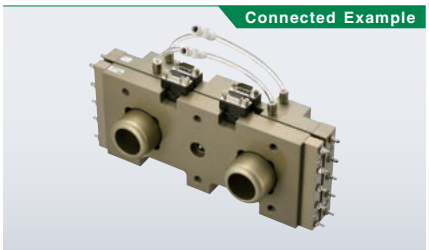

Robot Side

Order code No.	140283
TYPE	OX-WLB-30

- Superduralumin
- Weight : 2,905g
- Mounting position : robot side
- Weight capacity : ～ 80kg
- Tools : OX-WLBⅠ

W/o connector

Order code No.	140267
TYPE	OX-WLBN-30

- Superduralumin
- Weight : 2,865g
- Mounting position : robot side
- Weight capacity : ～ 80kg
- Tools : OX-WLBNⅠ

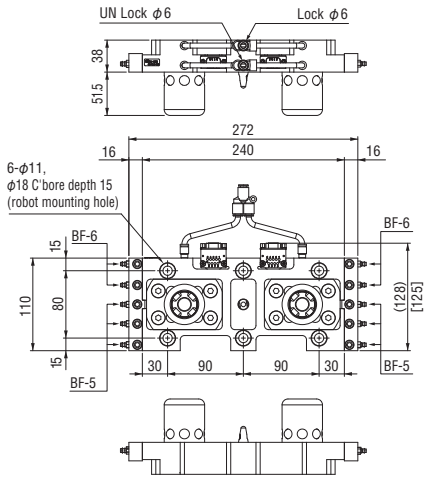

＊The value in [ ] shows the type w/o connector.

Additional Air Expansion

A Type / B Type / BN Type

OX-SB (ROBOT SIDE)

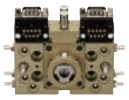

OX-SBA (ROBOT SIDE)

Connected Example

FOR OX-SSB (Robot Side)

Order code No.	140294
TYPE	OX-SSBA

- Weight:56g
- Attachments:mounting bolt (M3)×2
- Air port :M5 hole×4
- 8 ports in total including the air port of robot side body

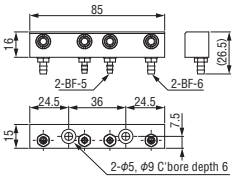

FOR OX-SSBI (Tool Side)

Order code No.	140295
TYPE	OX-SSBIA

- Weight:33g
- Attachments:mounting bolt (M3)×2
- Air port :M5 hole×4
- 8 ports in total including the air port of tool side body

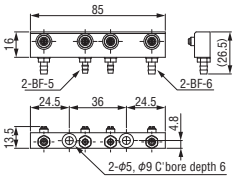

FOR OX-SA/OX-SB (Robot Side)

Order code No.	140193
TYPE	OX-SBA

- Weight:90g
- Attachments:mounting bolt (M4)×2
- Air port:M5 hole×4
- 10 ports in total including the air port of robot side body

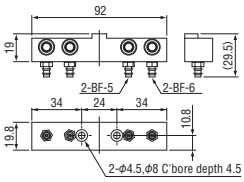

FOR OX-SAI/OX-SBI (Tool Side)

Order code No.	140194
TYPE	OX-SBIA

- Weight:70g
- Attachments:mounting bolt (M4)×2
- Air port:M5 hole×4
- 10 ports in total including the air port of tool side body

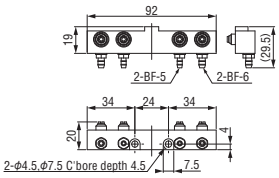

FOR OX-SA/OX-SB (Robot Side)

Order code No.	140251
TYPE	OX-SBA1

- Weight:91g
- Attachments:mounting bolt (M4)×2
- Air port:1/8 hole×4 . w/o check valve
- 10 ports in total including the air port of robot side body

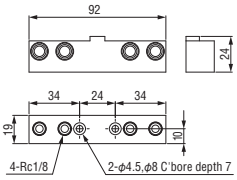

FOR OX-SAI/OX-SBI (Tool Side)

Order code No.	140252
TYPE	OX-SBIA1

- Weight:72g
- Attachments:mounting bolt (M4)×2
- Air port:1/8 hole×4
- 10 ports in total including the air port of tool side body

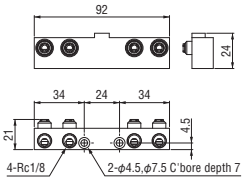

NEW FOR OX-SB (Robot Side)

Order code No.	140391
TYPE	OX-SCA-10

- Weight:144g
- Attachments:mounting bolt (M4)×2
- Air port:M5 hole×10
- 16 ports in total including the air port of robot side body

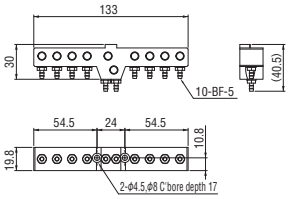

NEW FOR OX-SBI (Tool Side)

Order code No.	140392
TYPE	OX-SCIA-10

- Weight:90.7g
- Attachments:mounting bolt (M4)×2
- Air port:M5 hole×10
- 16 ports in total including the air port of tool side body

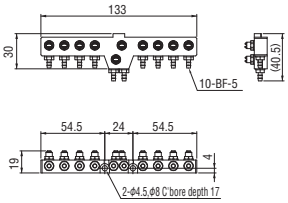

FOR X-LA/OX-LB (Robot Side)

Order code No.	140195
TYPE	OX-LBA

- Weight:115g
- Attachments:mounting bolt (M6)×2
- Air port :M5 hole×4
- 10 ports in total including the air port of robot side body

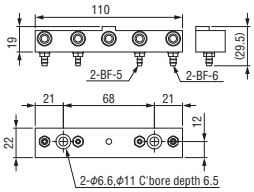

FOR OX-LAI/OX-LBI (Tool Side)

Order code No.	140196
TYPE	OX-LBIA

- Weight:82g
- Attachments:mounting bolt (M6)×2
- Air port :M5 hole×4
- 10 ports in total including the air port of robot side body

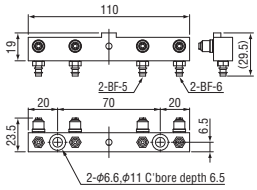

FOR OX-LA/OX-LB (Robot Side)

Order code No.	140253
TYPE	OX-LBA1

- Weight:113g
- Attachments:mounting bolt (M6)×2
- Air port:1/8 hole×5 . w/o check valve
- 11 ports in total including the air port of robot side body

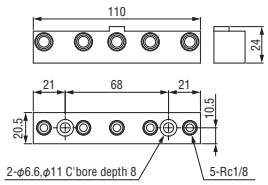

FOR OX-LAI/OX-LBI (Tool Side)

Order code No.	140254
TYPE	OX-LBIA1

- Weight:77g
- Attachments:mounting bolt (M6)×2
- Air port:1/8 hole×5
- 11 ports in total including the air port of tool side body

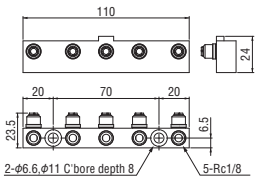

FOR OX-LA/OX-LB (Robot Side)

Order code No.	140287
TYPE	OX-LBA3

- Weight:160g
- Attachments:mounting bolt (M6)×2
- Air port:1/8 hole×5 . w/o check valve , hole (M5)×4
- 14 ports in total including the air port of robot side body

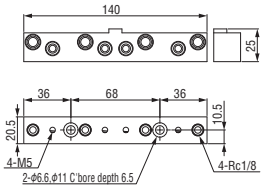

FOR OX-LAI/OX-LBI (Tool Side)

Order code No.	140288
TYPE	OX-LBIA3

- Weight:112g
- Attachments:mounting bolt (M6)×2
- Air port:1/8 hole×5 , hole (M5)×4
- 14 ports in total including the air port of tool side body

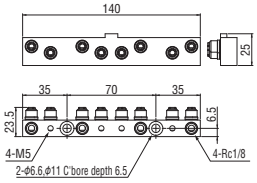

Accessories

A Type / B Type / BN Type

Remote valve for manual tool change actuation

Manual air valve push button (Return Type)

Order code No.	152308
TYPE	PB1-E
Weight	65g

Manual air valve push slide button (Retention Type)

Order code No.	152306
TYPE	PBW1-E
Weight	75g

Replacement Parts

Barbed joint

	Tool side			
	For OX-*A/*B	For OX-SSB	NEW For OX-SBS	For WSBI
Order code No.	110623	230116	230117	110722
TYPE	LX0004-101	XL0054-106A	XL0054-206A	LX0181-203
Weight	2g	1g	1g	1g

Steel ball *Material:SUS304

	Robot side	
	For OX-*A/*B	For OX-SSB/SBS
Order code No.	323000	310607
TYPE	ϕ6.35	ϕ5.5
Weight	1g	1g

Coil spring

	Robot side			
	For OX-SB/SBY/LA	For OX-LB	OX-WLB/SBH/SA/WSA/ Additional air expansion	For OX-SSB/SBS
Order code No.	110649	185221	110619	200223
TYPE	L00999-420	SAWANE5115	L00999-316	UR5-10
Weight	0.2g	0.4g	0.1g	0.1g

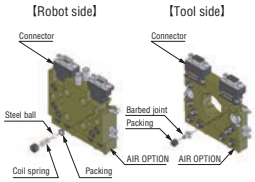

Packing *Material: CR (chloroprene rubber)

L00999-313
XL0054-204

S6
1ASS-5

	For OX-*A/*B		For OX-SSB/SBS	
	Tool side	Robot side	Tool side	Robot side
Order code No.	110551	184474	230077	271742
TYPE	L00999-313	S6 (C00503-A00X8)	XL0054-204	1ASS-5
Weight	0.2g	0.05g	0.1g	0.05g

Cable Accessories

D-SUB cable (OX-*A type)

● Bending radius (mm): R46

	Robot side	Tool side	Robot side	Tool side
Order code No.	140168	140167	140170	140169
TYPE	OX-DS09-H	OX-DS09-I-H	OX-DS15-H	OX-DS15-I-H
Weight	40g			
Cable length	0.5m			
Electric contact	9Pin		15Pin	
Electrical wiring	Movable cable (AWG22), for UL			

D-SUB cable for OX (OX-*B type)

Straight type

● Bending radius (mm): R46

	Robot side	Robot side	Tool side	Tool side
Order code No.	140197	140247	140202	140364
TYPE	OX-DS09S-H	OX-DS09S-H (1.5M)	OX-DS09P-I-H	OX-DS09P-I-H (1.5M)
Weight	60g	138g	60g	140g
Cable length	0.5m	1.5m	0.5m	1.5m
Electric contact	9Pin			
Electrical wiring	Movable cable (AWG22), for UL			

D-SUB cable for OX (OX-*B type)

L type

● Bending radius (mm): R46

	Robot side (L)	Robot side (L)	Tool side (L)	Tool side (L)
Order code No.	140203	140248	140204	140365
TYPE	OX-DS09SL-H	OX-DS09SL-H (1.5M)	OX-DS09PL-I-H	OX-DS09PL-I-H (1.5M)
Weight	60g	138g	60g	140g
Cable length	0.5m	1.5m	0.5m	1.5m
Electric contact	9Pin			
Electrical wiring	Movable cable (AWG22), for UL			

Connector Accessories

D-SUB connector (OX-A type)

Robot side　Tool side

＊Screws are not included.

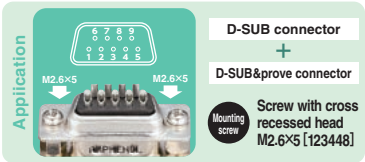

＊D-SUB connector can be mounted on cable wiring.

	Robot side	Tool side	Robot side	Tool side
Order code No.	140172	140171	140174	140173
TYPE	OX-DS09	OX-DS09-I	OX-DS15	OX-DS15-I
Weight	4g			
Electrical wiring	AWG22			
Electric contact	9Pin (2A DC24V MAX)		15Pin (2A DC24V MAX)	
Mounting screw size	OX-A TYPE OX-B TYPE: Screw with cross recessed head M3×6[123446] D-SUB& prove connector: Screw with cross recessed head M2.6×5[123448]		Screw with cross recessed head M3×16 (NUT 4PCS) [123449] M3 NUT [123301]	Screw with cross recessed head M3×10 [123447]

D-SUB connector (for WSB)

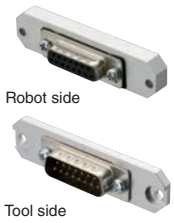

Robot side　Tool side

	Robot side	Tool side
Order code No.	140304	140305
TYPE	OX-DS15-WS	OX-DS15-I-WS
Weight	21g	13g
Electrical wiring	AWG22	
Electric contact	15Pin (2A)	
Attached screw	Bolt with Hexagon Socket M3×8	

Connector plate

＊Required to attach D-SUB connector to OX-B type. ➡ 1-22,23

＊Required to attach D-SUB & probe connector (for OX-A/B) to OX-WSBN type.

Order code No.	140289
TYPE	OX-DS09CNP
Weight	2g
Order code No.	140303
TYPE	OX-DPS09WCNP
Weight	6g

D-SUB & probe connector (for OX-*A/*B)

Robot side　Tool side

	Robot side	Tool side
Order code No.	140324	140325
TYPE	OX-DPS09A	OX-DPS09A-I
Weight	24g	
Electrical wiring	AWG22	
Electric contact	9Pin (2A)	
Attached screw	Screw with cross recessed head M3×6 [123446]	

● Connecter drawing ➡ See 1-33

Probe connector (OX-*A/*B type) solder-fix type

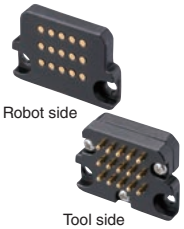

Robot side　Tool side

	Robot side	Tool side
Order code No.	140361	140360
TYPE	OX-PS15	OX-PS15-I
Weight	5g	8g
Electrical wiring	AWG22	
Electric contact	15Pin (2A)	
Attached screw	Screw with cross recessed head M3×6 [123446]	

● Connecter drawing ➡ See 1-33

Probe connector (OX-SSB/*A/*B type) solder-fix type

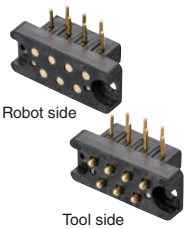

Robot side　Tool side

	Robot side	Tool side
Order code No.	140286	140285
TYPE	OX-PLA-07	OX-PLA-07-I
Weight	6g	
Electrical wiring	AWG22	
Electric contact	7Pin (1A)	
Attached screw	Screw with cross recessed head M3×6 [123446]	

● Connecter drawing ➡ See 1-33

Probe connector (OX-WSA type) solder-fix type

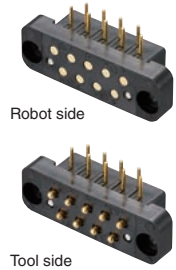

Robot side　Tool side

	Robot side	Tool side
Order code No.	140220	140221
TYPE	OX-PL09	OX-PL09-I
Weight	9g	
Electrical wiring	AWG22	
Electric contact	9Pin (1A)	
Attached screw	Screw with cross recessed head M3×16 (NUT 4PCS) [123449]	Screw with cross recessed head M3×10 [123447]

● Connecter drawing ➡ See 1-33

Wireless connector

Can be used for the place with moisture and dust with contactless design

Wireless connector

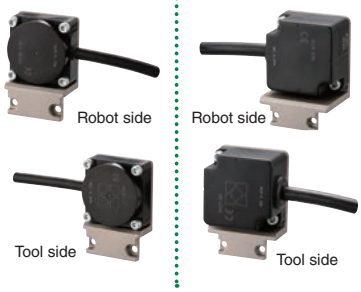

	FOR SB ROBOT SIDE	FOR SB TOOL SIDE	FOR LB ROBOT SIDE	FOR LB TOOL SIDE
Order code No.	140306	140307	140308	140378
TYPE	OX-RS04R-SB	OX-RS04T-SBI	OX-RS12R-LB	OX-RS12T1-LBI
Weight	195g	140g	417g	290g
Drive voltage	12V±1.5VDC	—	12V±1.5VDC	—
Input and output points	4 points + 1 point	4 points	12 points + 1 point	12 points
Attached screw	Screw with cross recessed head M3×8	Screw with cross recessed head M3×8	Screw with cross recessed head M3×8	Screw with cross recessed head M3×8

＊Check the specification and precautions concerning handling. ➡ 1-38　＊Check the drawing. ➡ 1-35
＊OX-RS12 is basically for the tool changer with load capacity 35kg or more.　＊For protection structure IP67
＊The output type is NPN type.　＊Power supply voltage DC24V　＊Cable Length: robot side 2m tool side 1m
＊To avoid interference between wireless connectors, no more than 1 wireless connector should be installed per tool changer.

Option & Replacement Parts

			Order code No.	TYPE	Tool changer																				
					Robot side	Tool side	Robot side	Tool side	Robot side	Tool side	Robot side	Tool side	Robot side	Tool side	Robot side	Tool side	Robot side	Tool side	Robot side	Tool side	Robot side	Tool side	Robot side	Robot side	Robot side
			Order code No. Order code No. for connectorless type is shown in ()		140266 (140280)	140268 (140281)	140181 (140225)	140182 (140226)	140299 (140300)	140301 (140302)	140183 (140231)	140186 (140232)	140274 (140258)	140273 (140259)	140184 (140277)	140187 (140278)	140217 (140229)	140218 (140230)	140275 (140260)	140276 (140261)	140233	140234	(140345)	140228 (140279)	140283 (140267)
			Order code No.	TYPE	OX-SSB(N)	OX-SSB(N)I	OX-SB(N)	OX-SB(N)I	OX-WSB(N)	OX-WSB(N)I	OX-LB(N)	OX-LB(N)I	OX-LBF(N)	OX-LBF(N)I	OX-WLB(N)	OX-WLB(N)I	OX-SBY(N)	OX-SBY(N)I	OX-SBH(N)	OX-SBH(N)I	OX-SBS	OX-SBSI	OX-SBN-30	OX-LB(N)-30	OX-WLB(N)-30
Air option	Robot side		140294	OX-SSBA	○	—	—	—	—	—	—	—	—	—	—	—	—	—	—	—	—	—	—	—	—
	Tool side		140295	OX-SSBIA	—	○	—	—	—	—	—	—	—	—	—	—	—	—	—	—	—	—	—	—	—
	Robot side		140193	OX-SBA	—	—	○	—	—	—	—	—	—	—	—	—	○	—	○	—	—	—	○	—	—
	Tool side		140194	OX-SBIA	—	—	—	○	—	—	—	—	—	—	—	—	—	○	—	○	—	—	—	—	—
	Robot side		140251	OX-SBA1	—	—	○	—	—	—	—	—	—	—	—	—	○	—	○	—	—	—	○	—	—
	Tool side		140252	OX-SBIA1	—	—	—	○	—	—	—	—	—	—	—	—	—	○	—	○	—	—	—	—	—
	Robot side		140391	OX-SCA-10	—	—	○	—	—	—	—	—	—	—	—	—	○	—	○	—	—	—	○	—	—
	Tool side		140392	OX-SCIA-10	—	—	—	○	—	—	—	—	—	—	—	—	—	○	—	○	—	—	—	—	—
	Robot side		140195	OX-LBA	—	—	—	—	—	—	○	—	○	—	—	—	—	—	—	—	—	—	—	○	—
	Tool side		140196	OX-LBIA	—	—	—	—	—	—	—	○	—	○	—	—	—	—	—	—	—	—	—	—	—
	Robot side		140253	OX-LBA1	—	—	—	—	—	—	○	—	○	—	—	—	—	—	—	—	—	—	—	○	—
	Tool side		140254	OX-LBIA1	—	—	—	—	—	—	—	○	—	○	—	—	—	—	—	—	—	—	—	—	—
	Robot side		140287	OX-LBA3	—	—	—	—	—	—	○	—	○	—	—	—	—	—	—	—	—	—	—	○	—
	Tool side		140288	OX-LBIA3	—	—	—	—	—	—	—	○	—	○	—	—	—	—	—	—	—	—	—	—	—
Maintenance parts	Barbed joint		110623	LX0004-101	—	—	—	○	—	—	—	○	—	○	—	○	—	○	—	○	—	—	—	—	—
			230116	XL0054-106A	—	○	—	—	—	—	—	—	—	—	—	—	—	—	—	—	—	○	—	—	—
			230117	XL0054-206A	—	—	—	—	—	—	—	—	—	—	—	—	—	—	—	—	○	—	—	—	—
			110722	LX0181-203	—	—	—	—	—	○	—	—	—	—	—	—	—	—	—	—	—	—	—	—	—
	Steel ball		323000	φ6.35	—	—	○	—	○	—	○	—	○	—	○	—	○	—	○	—	—	—	○	○	○
			310607	φ5.5	○	—	—	—	—	—	—	—	—	—	—	—	—	—	—	—	○	—	—	—	—
	Coil spring		110649	L00999-420	—	—	○	—	○	—	—	—	—	—	—	—	○	—	—	—	—	—	○	—	—
			185221	SAWANE5115	—	—	—	—	—	—	○	—	○	—	—	—	—	—	—	—	—	—	—	○	—
			110619	L00999-316	—	—	—	—	—	—	—	—	—	—	○	—	—	—	○	—	—	—	—	—	○
			200223	UR5-10	○	—	—	—	—	—	—	—	—	—	—	—	—	—	—	—	○	—	—	—	—
	Packing (Robot side)		184474	S6(C00503-A00X8)	—	—	○	—	○	—	○	—	○	—	○	—	○	—	○	—	—	—	○	○	○
			271742	1ASS-5	○	—	—	—	—	—	—	—	—	—	—	—	—	—	—	—	○	—	—	—	—
	Packing (Tool side)		110551	L00999-313	—	—	—	○	—	○	—	○	—	○	—	○	—	○	—	○	—	—	—	—	—
			230077	XL0054-204	—	○	—	—	—	—	—	—	—	—	—	—	—	—	—	—	—	○	—	—	—
Cable Accessories	Robot side		140168	OX-DS09-H	—	—	○※1	—	○※1	—	○※1	—	○※1	—	○※1	—	○※1	—	○※1	—	○	—	○※1	○※1	○※1
	Tool side		140167	OX-DS09-I-H	—	—	—	○※1	—	○※1	—	○※1	—	○※1	—	○※1	—	○※1	—	○※1	—	○	—	—	—
	Robot side		140197	OX-DS09S-H	—	—	○※1	—	○※1	—	○※1	—	○※1	—	○※1	—	○※1	—	○※1	—	○	—	○※1	○※1	○※1
			140247	OX-DS09S-H(1.5M)	—	—	○※1	—	○※1	—	○※1	—	○※1	—	○※1	—	○※1	—	○※1	—	○	—	○※1	○※1	○※1
	Tool side		140202	OX-DS09P-I-H	—	—	—	○※1	—	○※1	—	○※1	—	○※1	—	○※1	—	○※1	—	○※1	—	○	—	—	—
			140364	OX-DS09P-I-H(1.5M)	—	—	—	○※1	—	○※1	—	○※1	—	○※1	—	○※1	—	○※1	—	○※1	—	○	—	—	—
	Robot side		140203	OX-DS09SL-H	—	—	○※1	—	○※1	—	○※1	—	○※1	—	○※1	—	○※1	—	○※1	—	○	—	○※1	○※1	○※1
			140248	OX-DS09SL-H(1.5M)	—	—	○※1	—	○※1	—	○※1	—	○※1	—	○※1	—	○※1	—	○※1	—	○	—	○※1	○※1	○※1
	Tool side		140204	OX-DS09PL-I-H	—	—	—	○※1	—	○※1	—	○※1	—	○※1	—	○※1	—	○※1	—	○※1	—	○	—	—	—
			140365	OX-DS09PL-I-H(1.5M)	—	—	—	○※1	—	○※1	—	○※1	—	○※1	—	○※1	—	○※1	—	○※1	—	○	—	—	—
Connector Accessories	Robot side		140172	OX-DS09	—	—	○※2	—	○※2	—	○※2	—	○※2	—	○※2	—	○※2	—	○※2	—	—	—	○※2	○※2	○※2
	Tool side		140171	OX-DS09-I	—	—	—	○※2	—	○※2	—	○※2	—	○※2	—	○※2	—	○※2	—	○※2	—	—	—	—	—
	Robot side		140174	OX-DS15	—	—	—	—	○※3	—	—	—	—	—	—	—	—	—	—	—	—	—	—	—	—
	Tool side		140173	OX-DS15-I	—	—	—	—	—	○※3	—	—	—	—	—	—	—	—	—	—	—	—	—	—	—
	Robot side		140304	OX-DS15-WS	—	—	—	—	○※3	—	—	—	—	—	—	—	—	—	—	—	—	—	—	—	—
	Tool side		140305	OX-DS15-I-WS	—	—	—	—	—	○※3	—	—	—	—	—	—	—	—	—	—	—	—	—	—	—
	Connector plate		140289	OX-DS09CNP	—	—	○※2	○※2	○※2	○※2	○※2	○※2	○※2	○※2	○※2	○※2	○※2	○※2	○※2	○※2	—	—	○※2	○※2	○※2
			140303	OX-DPS09WCNP	—	—	—	—	○	○	—	—	—	—	—	—	—	—	—	—	—	—	—	—	—
	Robot side	★	140324	OX-DPS09A	—	—	○	—	○※4	—	○	—	○	—	○	—	○	—	○	—	—	—	○	○	○
	Tool side		140325	OX-DPS09A-I	—	—	—	○	—	○※4	—	○	—	○	—	○	—	○	—	○	—	—	—	—	—
	Robot side		140361	OX-PS15	—	—	○	—	○※4	—	○	—	○	—	○	—	○	—	○	—	—	—	○	○	○
	Tool side		140360	OX-PS15-I	—	—	—	○	—	○※4	—	○	—	○	—	○	—	○	—	○	—	—	—	—	—
	Robot side		140286	OX-PLA-07	○	—	○	—	○※4	—	○	—	○	—	○	—	○	—	○	—	—	—	○	○	○
	Tool side		140285	OX-PLA-07-I	—	○	—	○	—	○※4	—	○	—	○	—	○	—	○	—	○	—	—	—	—	—
	Robot side	★	140190	OXR-DPS09	—	—	—	—	—	—	—	—	—	—	—	—	—	—	—	—	○	—	—	—	—
	Tool side		140192	OXR-DPS09-I	—	—	—	—	—	—	—	—	—	—	—	—	—	—	—	—	—	○	—	—	—
Wireless connector	Robot side		140306	OX-RS04R-SB	—	—	○	—	—	—	○	—	○	—	○	—	○	—	○	—	—	—	○	○	○
	Tool side		140307	OX-RS04T-SBI	—	—	—	○	—	—	—	○	—	○	—	○	—	○	—	○	—	—	—	—	—
	Robot side		140321	OXR-RS04R-10	—	—	—	—	—	—	—	—	—	—	—	—	—	—	—	—	○	—	—	—	—
	Tool side		140323	OXR-RS04T-10I	—	—	—	—	—	—	—	—	—	—	—	—	—	—	—	—	—	○	—	—	—
	Robot side		140308	OX-RS12R-LB	—	—	—	—	—	—	○※5	—	○※5	—	○※5	—	—	—	—	—	—	—	○※5	○※5	○※5
	Tool side		140378	OX-RS12T1-LBI	—	—	—	—	—	—	—	○※5	—	○※5	—	○	—	—	—	—	—	—	—	—	—

＊1 If you use a cable accessory with no connector, you will need the proper D-sub & probe connectors(★mark).
＊2 To install the D-SUB connector (140172, 140171), use the connector plate (140289) OX-DS09CNP as a set.
＊3 The D-SUB connectors (140304) OX-DS15WS, (140305) OX-DS15-I-WS, (140174) OX-DS15, and (140173) OX-DS15-I are dedicated to the OX-WSB・WSB I type.
＊4 The connector plate (140303) OX-DPS09WCNP is required for mounting on the type without a connector.
＊5 Because of the thickness of the wireless connector, it will come out or same as the mounting surface of the tool changer, please confirm the size.

			Air option											
			Robot side	Tool side	Robot side	Tool side	Robot side	Tool side	Robot side	Tool side	Robot side	Tool side	Robot side	Tool side
		Order code No.	140294	140295	140193	140194	140251	140252	140195	140196	140253	140254	140287	140288
		Order code No. / TYPE	OX-SSBA	OX-SSBIA	OX-SBA	OX-SBIA	OX-SBA1	OX-SBIA1	OX-LBA	OX-LBIA	OX-LBA1	OX-LBIA1	OX-LBA3	OX-LBIA3 ※
Maintenance parts	Barbed joint	110623	LX0004-101	—	—	—	○	—	—	—	○	—	—	—	○
		230116	XL0054-106A	—	○	—	—	—	—	—	—	—	—	—	—
		110686	LX0120-202	—	—	—	—	—	○	—	—	—	○	—	○
	Steel ball	323000	ϕ6.35	—	—	○	—	—	—	○	—	—	—	○	—
		310607	ϕ5.5	○	—	—	—	—	—	—	—	—	—	—	—
	Coil spring	110649	L00999-420	—	—	—	—	—	—	—	—	—	—	—	—
		185221	SAWANE5115	○	—	—	—	—	—	—	—	—	—	—	—
		110619	L00999-316	—	—	○	—	—	—	○	—	—	—	○	—
		200223	UR5-10	○	—	—	—	—	—	—	—	—	—	—	—
	Packing (Robot side)	184474	S6(C00503-A00X8)	—	—	○	—	—	—	○	—	—	—	○	—
		271742	1ASS-5	○	—	—	—	—	—	—	—	—	—	—	—
	Packing (Tool side)	110551	L00999-313	—	—	—	○	—	—	—	○	—	—	—	○
		230077	XL0054-204	—	○	—	—	—	—	—	—	—	—	—	—
		110687	LX0120-203	—	—	—	—	—	○	—	—	—	○	—	○

※ (140288) OX-LBIA3 [for M5 port: (110623) LX0004-101+(110551) L00999-313, for M6 port: (110686) LX0120-202+(110687) LX0120-203]

OX-SSB/SSBI

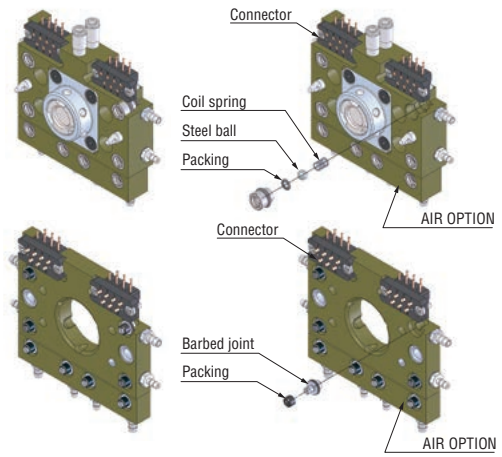

OX-SB/SBI

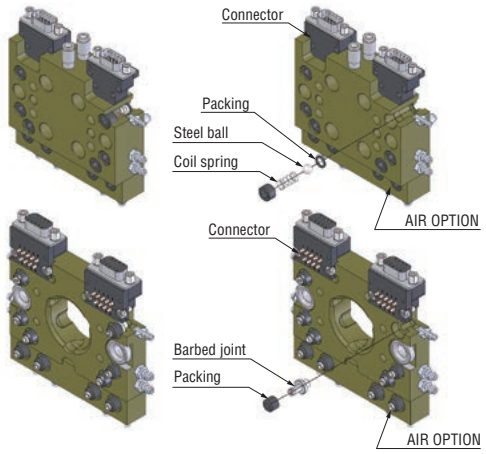

OX-WSB/WSBI

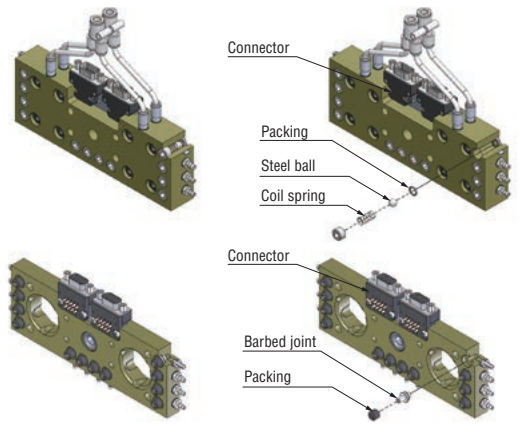

OX-WLB/WLBI

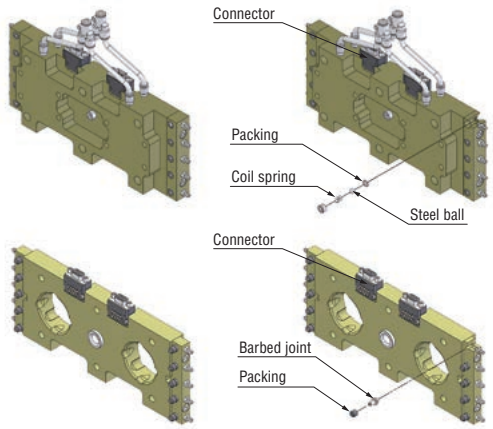

Substitute Product of Tool Changer（A type）

Repairing parts of tool changer（A type）

*For more information, please contact our sales office nearest you.

Piston		For OX-SA
	Order code No.	140249
	TYPE	OX-SAP
	Weight	94g
	Attachments PARTS	Piston set, Spring, Steel ball, Steel ball holder

Piston		For OX-LA
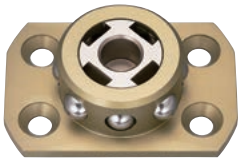	Order code No.	140250
	TYPE	OX-LAP
	Weight	336g
	Attachments PARTS	Piston set, Spring, Steel ball, Steel ball holder

Substitute product of tool changerr（A type）

*For more information, please contact our sales office nearest you.

Production stopped		Substitute		
Order code No.	TYPE	Order code No.	TYPE	Thickness(mm)
140156	OX-SA	140225	OX-SBN	+5
140157	OX-SAI	140226	OX-SBNI	0
140158	OX-LA	140231	OX-LBN	+9
140159	OX-LAI	140232	OX-LBNI	0
140162	OX-WSA	140300	OX-WSBN	+4.5
140163	OX-WSAI	140302	OX-WSBNI	0
140160	OX-WLA	140277	OX-WLBN	+8
140161	OX-WLAI	140278	OX-WLBNI	0
140164	OX-SA-30	140345	OX-SBN-30	+5
140165	OX-LA-30	140279	OX-LBN-30	+8
140166	OX-WLA-30	140267	OX-WLBN-30	+7.5

Subroutine product of additional air expansion for A type

*For more information, please contact our sales office nearest you.

Production stopped		Substitute	
Order code No.	TYPE	Order code No.	TYPE
110547	L00999-306 SET	140193	OX-SBA
110548	L00999-207 SET	140194	OX-SBIA
110545	L00999-406 SET	140195	OX-LBA
110546	L00999-407 SET	140196	OX-LBIA

OX-SA (ROBOT SIDE)

A type

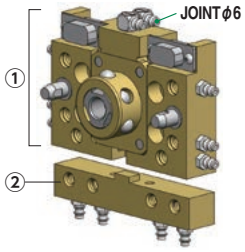

B type

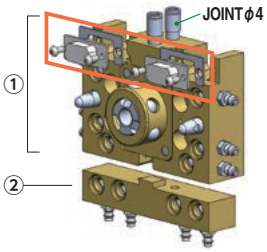

	Order code No.	TYPE	Remarks	Qty
①	140225	OX-SBN	Tool changer	1
	140289	OX-DS09CNP	Connector plate	2
	140172	OX-DS09	D-SUB connector	2
	123446	BKJ 3-6 (M3*6)	Screw with cross recessed head	4
②	140193	OX-SBA	Additional air expansion	1

*②：If not used, purchase order is not required.

OX-SAI (TOOL SIDE)

A type

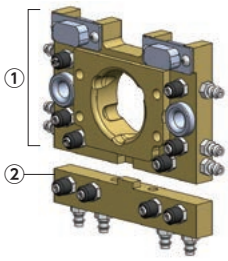

B type

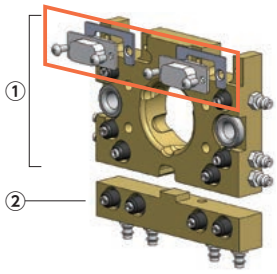

	Order code No.	TYPE	Remarks	Qty
①	140226	OX-SBNI	Tool changer	1
	140289	OX-DS09CNP	Connector plate	2
	140171	OX-DS09-I	D-SUB connector	2
	123446	BKJ 3-6 (M3*6)	Screw with cross recessed head	4
②	140194	OX-SBIA	Additional air expansion	1

*②：If not used, purchase order is not required.

OX-WSA (ROBOT SIDE)

A type | B type

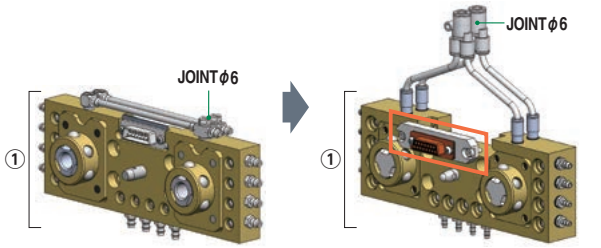

	Order code No.	TYPE	Remarks	Qty
①	140300	OX-WSBN	Tool changer	1
	140304	OX-DS15-WS	D-SUB connector	1

OX-WSAI (TOOL SIDE)

A type | B type

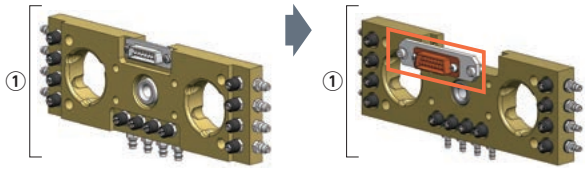

	Order code No.	TYPE	Remarks	Qty
①	140302	OX-WSBNI	Tool changer	1
	140305	OX-DS15-I-WS	D-SUB connector	1

OX-LA (ROBOT SIDE)

A type | B type

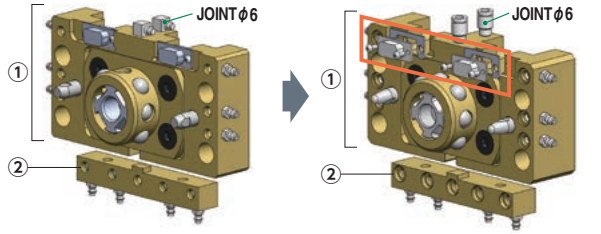

	Order code No.	TYPE	Remarks	Qty
①	140231	OX-LBN	Tool changer	1
	140289	OX-DS09CNP	Connector plate	2
	140172	OX-DS09	D-SUB connector	2
	123446	BKJ 3-6 (M3∗6)	Screw with cross recessed head	4
②	140195	OX-LBA	Additional air expansion	1

∗②：If not used, purchase order is not required.

OX-LAI (TOOL SIDE)

A type | B type

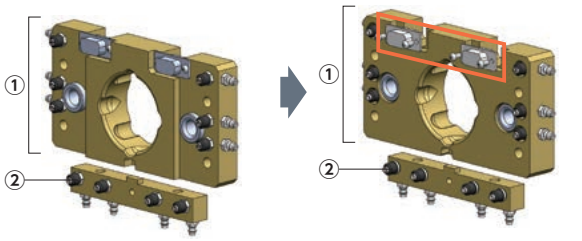

	Order code No.	TYPE	Remarks	Qty
①	140232	OX-LBNI	Tool changer	1
	140171	OX-DS09-I	D-SUB connector	2
	123446	BKJ 3-6 (M3∗6)	Screw with cross recessed head	4
②	140196	OX-LBIA	Additional air expansion	1

∗②：If not used, purchase order is not required.

OX-WLA (ROBOT SIDE)

A type | B type

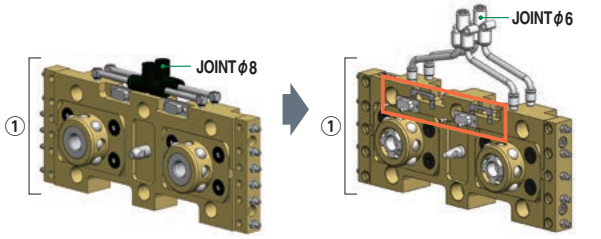

	Order code No.	TYPE	Remarks	Qty
①	140277	OX-WLBN	Tool changer	1
	140289	OX-DS09CNP	Connector plate	2
	140172	OX-DS09	D-SUB connector	2
	123446	BKJ 3-6 (M3∗6)	Screw with cross recessed head	4

OX-WLAI (TOOL SIDE)

A type | B type

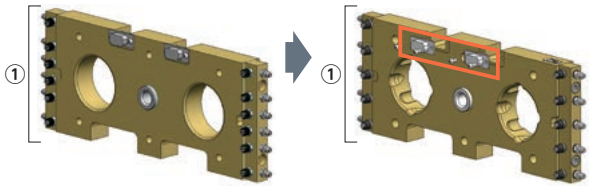

	Order code No.	TYPE	Remarks	Qty
①	140278	OX-WLBNI	Tool changer	1
	140171	OX-DS09-I	D-SUB connector	2
	123446	BKJ 3-6 (M3∗6)	Screw with cross recessed head	4

For Articulated Robots

Essential tool for high performance of robot.

Please check the performance table on the web site.

Tool changer
(for articulated robots)

You can see moving images of products by using QR code reader of your smartphone.

■ Specification

Product name	Order code No.	TYPE	Weight (g)	Weight capacity (kg)	Power to draw (N) / Power to force (N)	Allowable bending moment (Nm)	Allowable torsional moment (Nm)	Electric contact / Connector shape	Piping connect	Page of details
Tool changer	140310	OX-005A	38	~ 0.5	60 / 50	1.7	0.9	6Pin 2A DC24V Max / Connector(option)	2port (M3)	1-25
	140315	OX-005AI	17							
	140235	OX-03A	125	~ 3	600 / 160	5.2	1.0	9Pin 2A DC24V Max / Connector(option)	6port (M5)	
	140236	OX-03AI	45							
	140237	OX-05A	250	~ 5		6.5	1.2	11Pin 2A DC24V Max / Connector(option)		
	140238	OX-05AI	115							
	140262	OX-10B	199	~ 10	1,350 / 400	17.5	12.8			1-26
	140263	OX-10BI	115							
	140292	OX-20B	507	~ 20	2,200 / 420	28.0	20.0	16Pin 2A DC24V Max / Connector(option)		
	140293	OX-20BI	226							
	140398	OX-35B	1225	~ 35	4,000 / 750	91.8	55.5	9Pin 2A DC24V Max / Connector(option)	6port (Rc1/8)	1-27
	140316	OX-35AI	545							
	140313	OX-60A ※1	1440	~ 60	6,000 / (180) ※2	185.0	225.0	11Pin 2A DC24V Max / Connector(option)	8port (Rc1/8)	
	140318	OX-60AI	734							
NEW	140373	OX-120A	3671	~ 120	14,000 / (2,350)	750.0	750.0	16Pin 2A DC24V Max / Connector(option)	8port (PT1/4)	1-28
NEW	140374	OX-120AI	1770							
Coming soon!	140314	OX-230A	6240	~ 230	20,000 / (3,500)	15,000	15,000	8Pin 5A AC/DC200V Max / Connector(option)	10port (Rc3/8)	
	140319	OX-230AI	3360							
	140399	OX-35BT	1445	~ 35	4,000 / 750	91.8	55.5	4Pin 13A AC/DC200V Max / Connector(option)	6port (Rc1/8)	1-29
	140317	OX-35ATI	535							

※Please use manual push button "PB1-E(152308), PBW1-E(152306)" for manual exchange. ➜ 1-30 6-11
※1 There is no detachable mechanism for the OX-60A. ※2 The power to force (n) is the reaction value of the packing.

■ Common specification

Positional reproduction Accuracy	Used Air pressure	Drive piping	Acceptable electric wiring	Allowable temperature/humidity range
±0.02mm*1	0.5~0.7MPa	Clean air, piping of $\phi 6$ ($\phi 4$*2), double action type	AWG20 Max.	0℃-55℃, 0%-95% (w/o condensation)

*1 Based on our measurement
*2 $\phi 6$: OX-35A, OX-35AT, OX-60A, OX-120A, OX-230A

Allowable-load curve

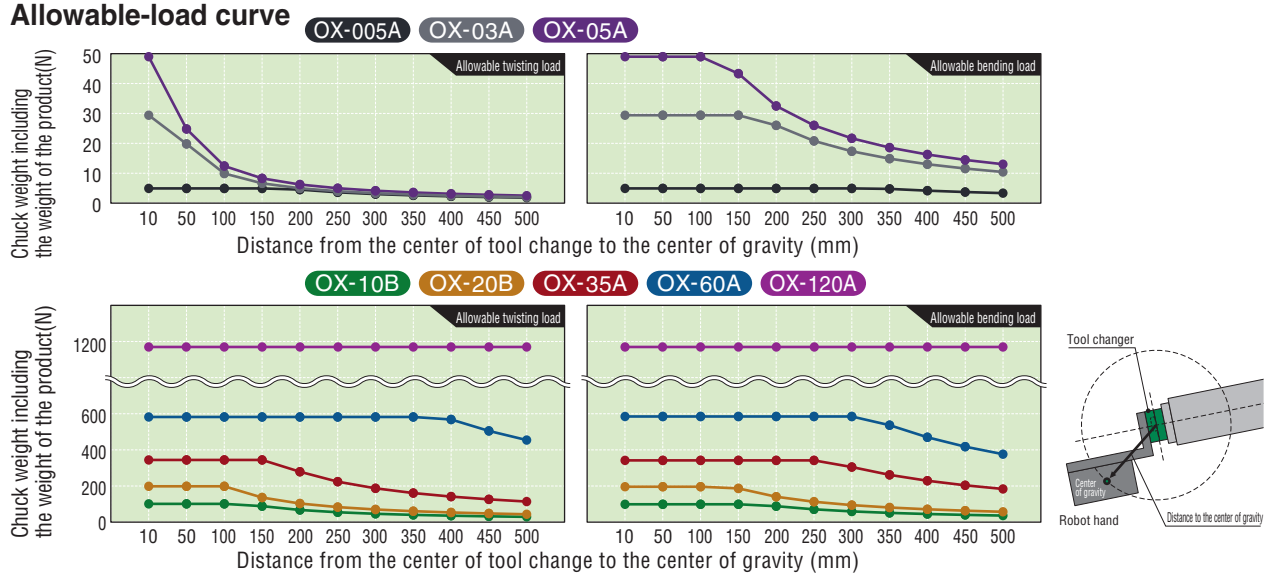

Supports high-speed operation of parallel link robots. (Weight capacity 500g)

Robot Side

Order code No.	140310
TYPE	OX-005A

- Superduralumin
- Weight : 38g
- Mounting position : robot side
- Weight capacity : ~ 500g
- Thickness after connection : 27mm

Tool Side

Order code No.	140315
TYPE	OX-005AI

- Superduralumin
- Weight : 17g
- Mounting position : tool side
- Weight capacity : ~ 500g
- Thickness after connection : 27mm

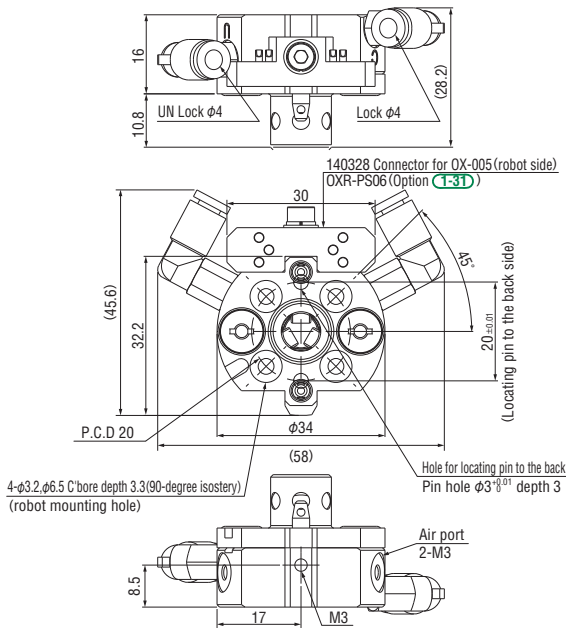

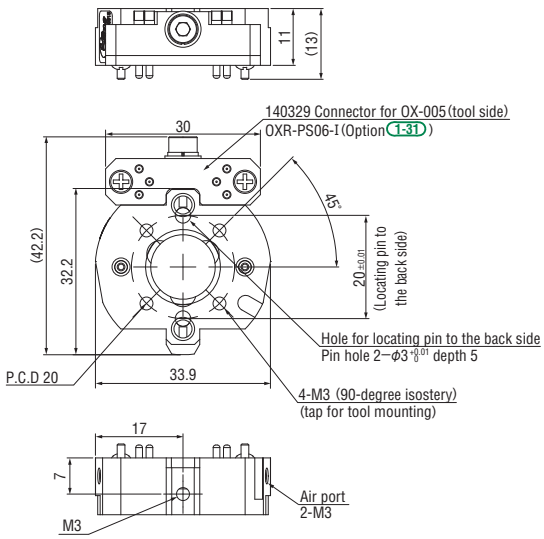

For small-size robots. (Weight capacity 3kg, 5kg)

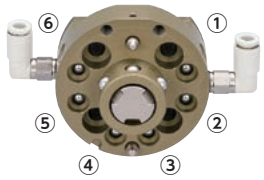

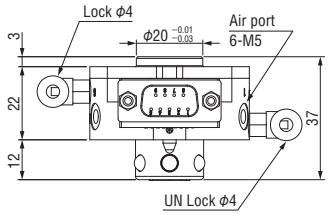

Robot Side

Order code No.	140235
TYPE	OX-03A

- Superduralumin
- Weight : 125g
- Mounting position : robot side
- Weight capacity : ~ 3kg
- Thickness after connection : 38mm

Robot Side

Order code No.	140237
TYPE	OX-05A

- Steel
- Weight : 250g
- Mounting position : robot side
- Weight capacity : ~ 5kg
- Thickness after connection : 38mm

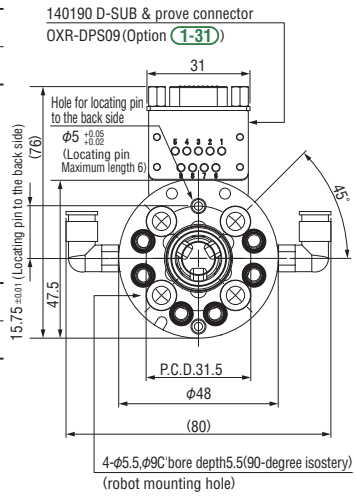

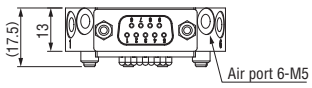

Tool Side

Order code No.	140236
TYPE	OX-03AI

- Superduralumin
- Weight : 45g
- Mounting position : tool side
- Weight capacity : ~ 3kg
- Thickness after connection : 38mm

Tool Side

Order code No.	140238
TYPE	OX-05AI

- Steel
- Weight : 115g
- Mounting position : tool side
- Weight capacity : ~ 5kg
- Thickness after connection : 38mm

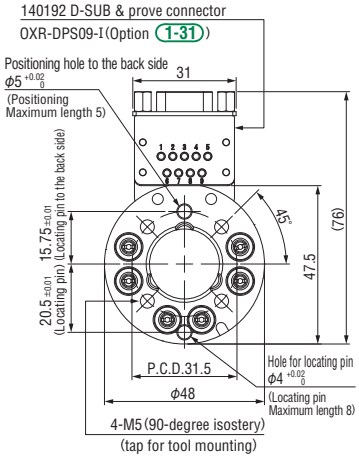

For small-size robots. (Weight capacity 10kg)

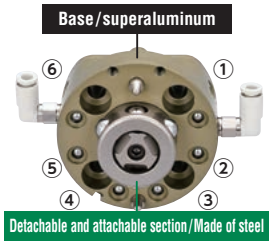

Robot Side

Order code No.	140262
TYPE	OX-10B

- Weight：199g
- Mounting position：robot side
- Weight capacity：～10kg
- Thickness after connection：43mm

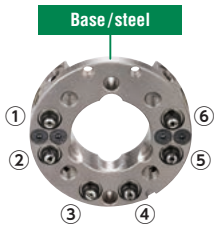

Tool Side

Order code No.	140263
TYPE	OX-10BI

- Weight：115g
- Mounting position：tool side
- Weight capacity：～10kg
- Thickness after connection：43mm

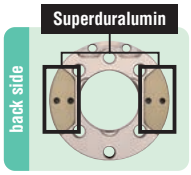

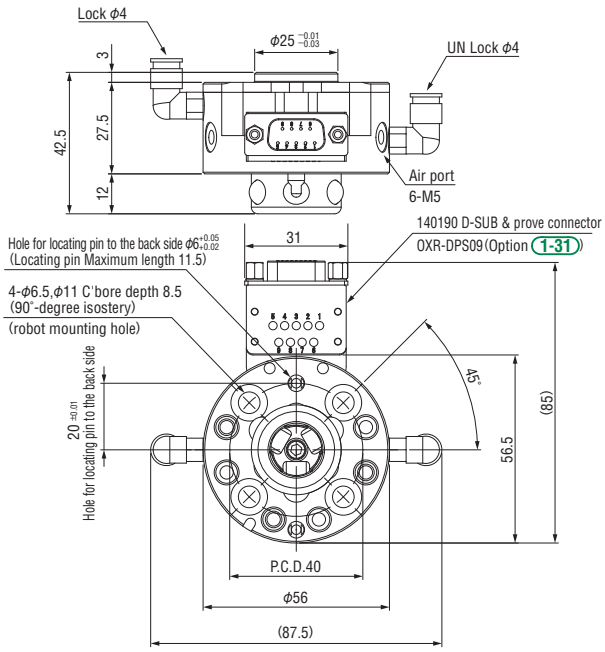

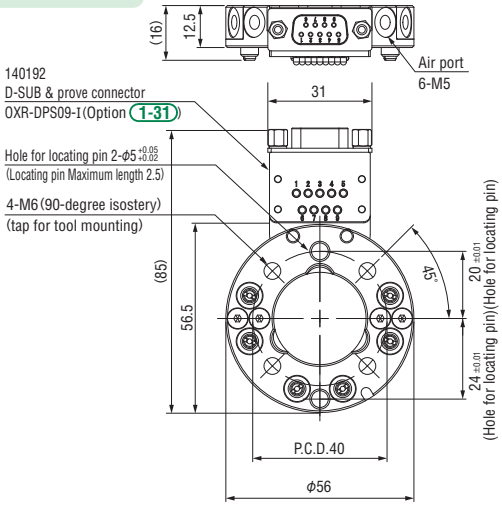

For small-size robots. (Weight capacity 20kg)

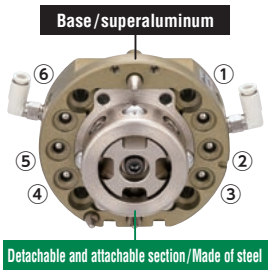

Robot Side

Order code No.	140292
TYPE	OX-20B

- Weight：507g
- Mounting position：robot side
- Weight capacity：～20kg
- Thickness after connection：47mm
- Compatibility with A type
- Confirmation sensor of piston operation can be attached(OP).

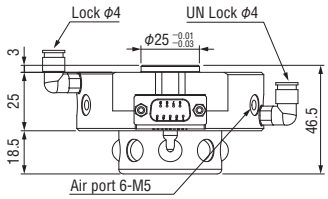

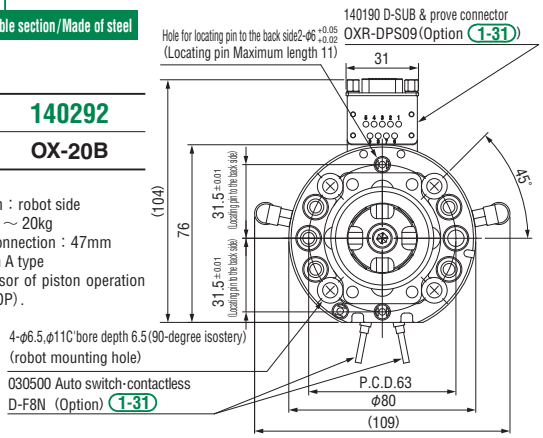

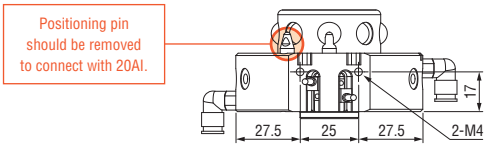

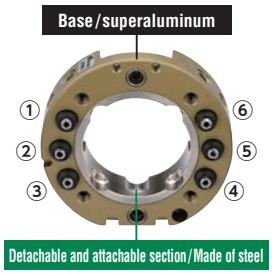

Tool Side

Order code No.	140293
TYPE	OX-20BI

- Weight：226g
- Mounting position：tool side
- Weight capacity：～20kg
- Thickness after connection：47mm
- Compatibility with A type

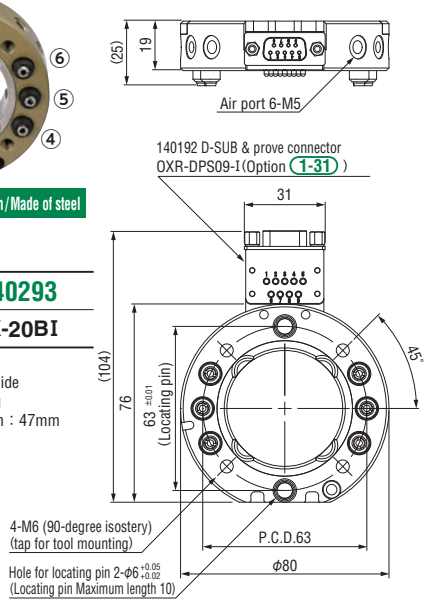

For middle-size robot. (Weight capacity 35kg)

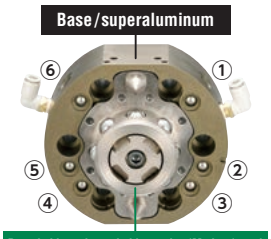

Robot Side

Order code No.	140398
TYPE	OX-35B

- Weight : 1225g
- Mounting position : robot side
- Weight capacity : ~ 35kg
- Thickness after connection : 60mm

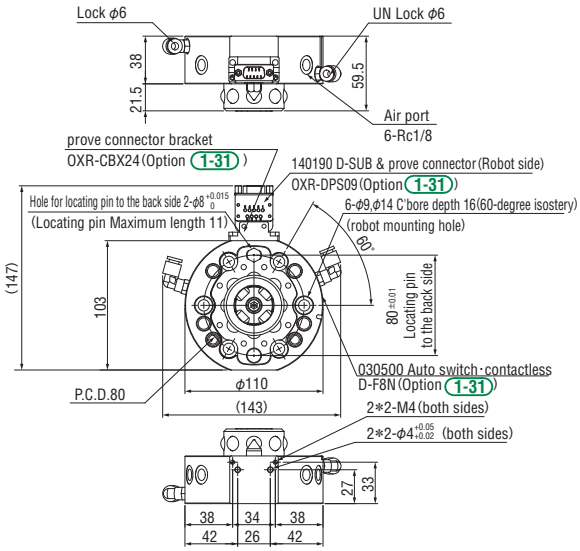

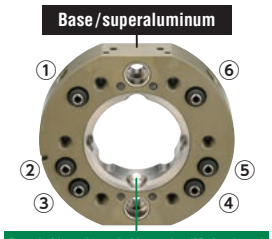

Tool Side

Order code No.	140316
TYPE	OX-35AI

- Weight : 545g
- Mounting position : tool side
- Weight capacity : ~ 35kg
- Thickness after connection : 60mm

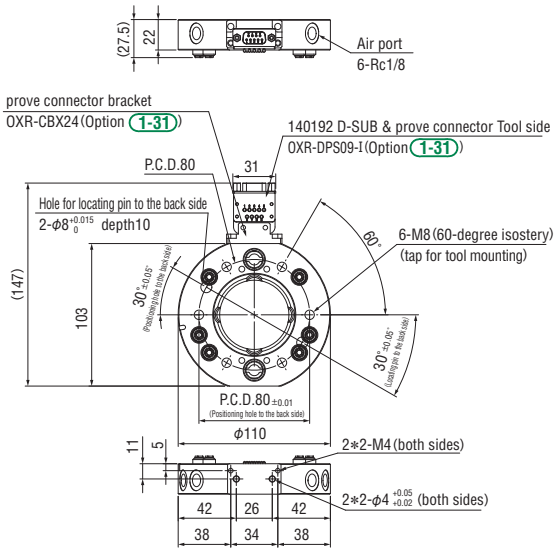

For middle-size robot. (Weight capacity 60kg)

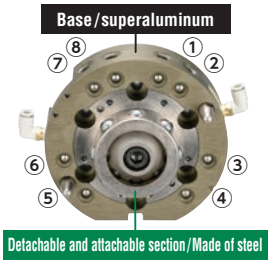

Robot Side

Order code No.	140313
TYPE	OX-60A

- Weight : 1440g
- Mounting position : robot side
- Weight capacity : ~ 60kg
- Thickness after connection : 56mm

Note: without detachable mechanism

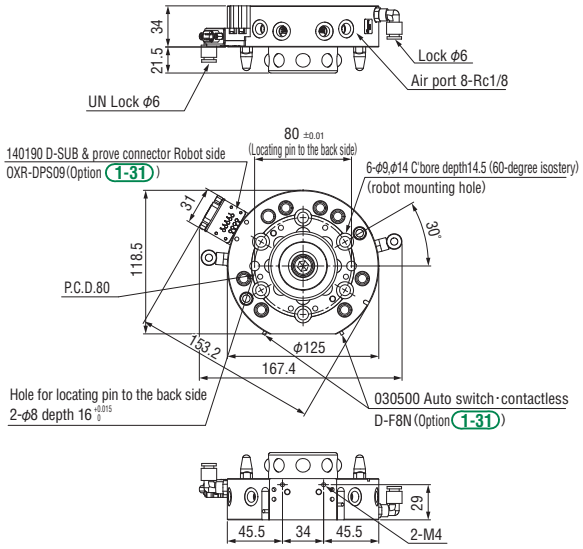

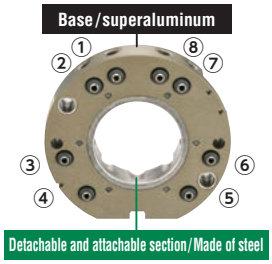

Tool Side

Order code No.	140318
TYPE	OX-60AI

- Weight : 734g
- Mounting position : tool side
- Weight capacity : ~ 60kg
- Thickness after connection : 56mm

Note: without detachable mechanism

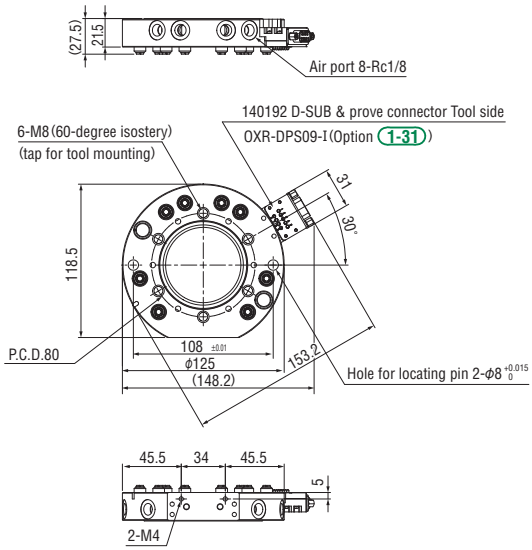

Quick Chuck Change Automatic for Articulated Robots

For large robot. (Weight capacity 120kg)

NEW

Base / superaluminum

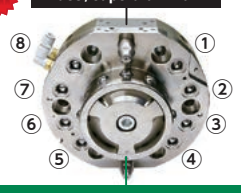

Detachable and attachable section / Made of steel

Robot Side

Order code No.	140373
TYPE	OX-120A

- Weight : 3,671g
- Mounting position : robot side
- Weight capacity : ～ 120kg
- Thickness after connection : 75mm

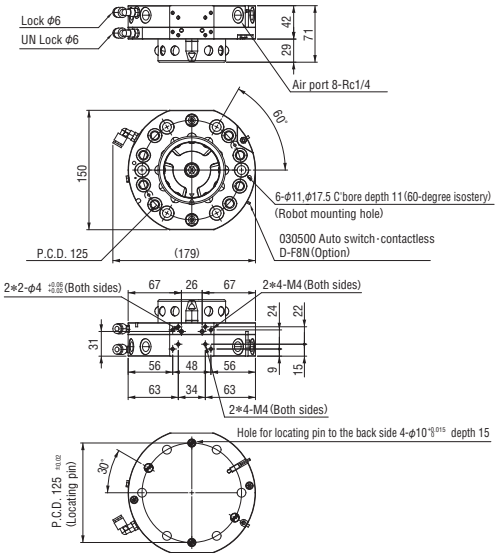

NEW

Base / superaluminum

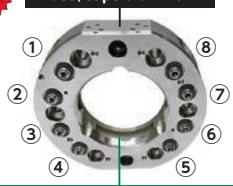

Detachable and attachable section / Made of steel

Tool Side

Order code No.	140374
TYPE	OX-120AI

- Weight : 1,770g
- Mounting position : tool side
- Weight capacity : ～ 120kg
- Thickness after connection : 75mm

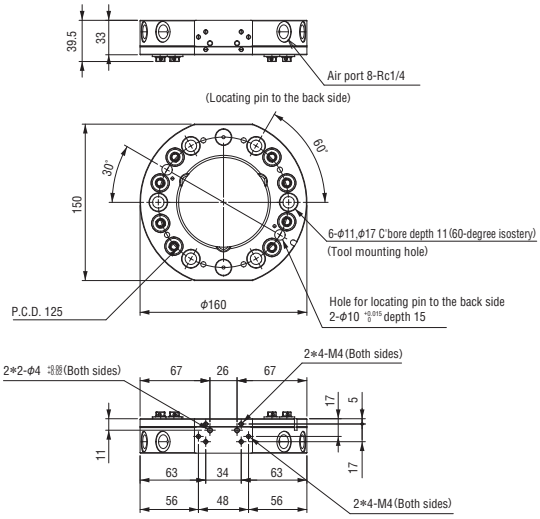

For large robot. (Weight capacity 230kg)

Will be on sale soon. Please contact us about the availabity of the product.

NEW

Base / superaluminum

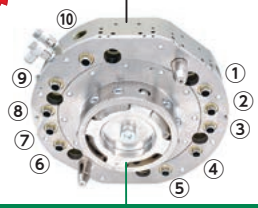

Detachable and attachable section / Made of steel

Robot Side

Order code No.	140314
TYPE	OX-230A

- Weight : 6,240g
- Mounting position : robot side
- Weight capacity : ～ 230kg
- Thickness after connection : 83mm

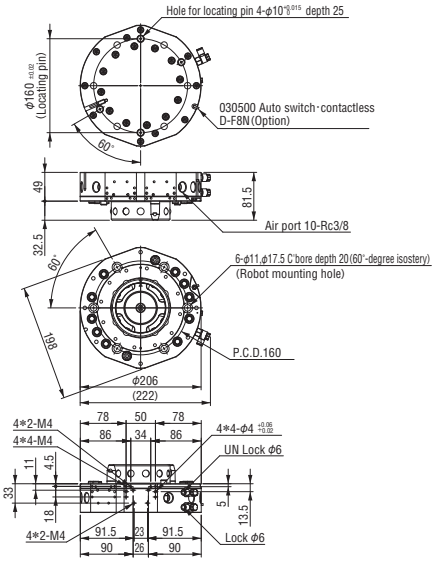

NEW

Base / superaluminum

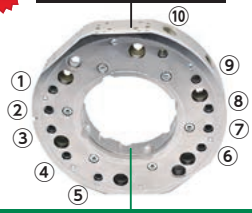

Detachable and attachable section / Made of steel

Tool Side

Order code No.	140319
TYPE	OX-230AI

- Weight : 3,360g
- Mounting position : tool side
- Weight capacity : ～ 230kg
- Thickness after connection : 83mm

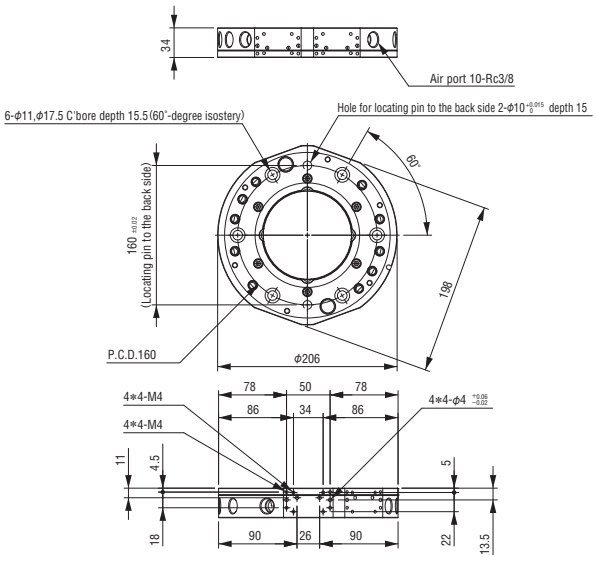

Junction error absorbing type in high speed operation (Weight capacity 35kg)

● The products are created after your order. Please contact our sales offices for more. information about delivery date / price.

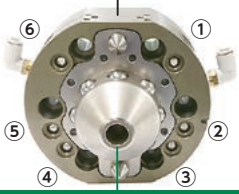

Robot Side

Order code No.	140399
TYPE	OX-35BT

- Weight : 1445g
- Mounting position : robot side
- Weight capacity : ~ 35kg
- Thickness after connection : 60mm (max 74.5mm)
- Accomodates for errors up to ± 10mm.

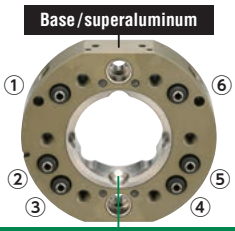

Tool Side

Order code No.	140317
TYPE	OX-35ATI

- Weight : 535g
- Mounting position : tool side
- Weight capacity : ~ 35kg
- Thickness after connection : 60mm (max 74.5mm)

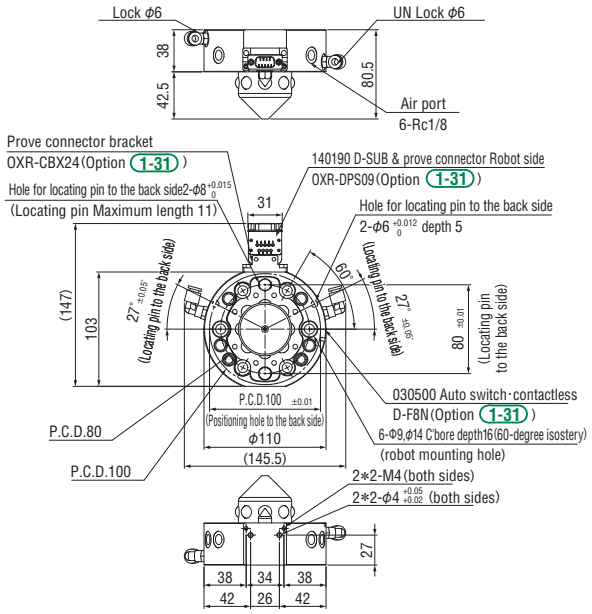

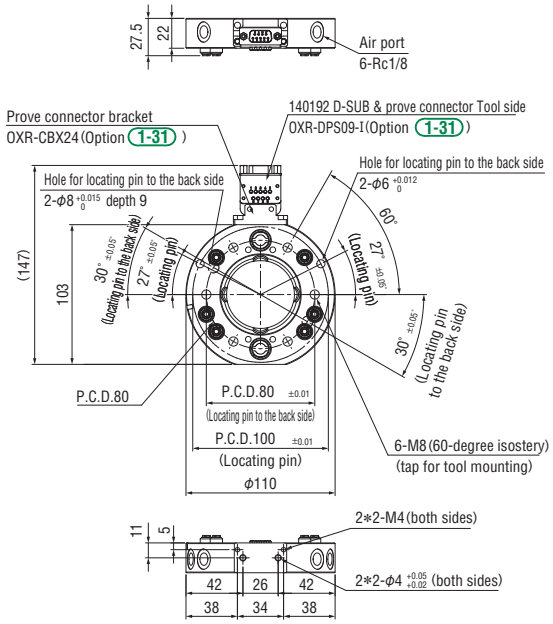

Accessories

For articulated robots

Remote valve for manual tool change actuation

Manual air valve push button (Return Type)

Order code No.	152308
TYPE	PB1-E
Weight	65g

Manual air valve push slide button (Retention Type)

Order code No.	152306
TYPE	PBW1-E
Weight	75g

Air port Accessories

■OX-005A

Additional air expansion		For OX-005A Robot side	For OX-005A Tool side
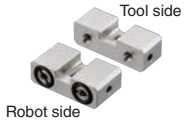 Tool side / Robot side	Order code No.	140326	140327
	TYPE	OX-005AA	OX-005AIA
	Weight	12g	7g

● Attachments : mounting bolt (M3×8) ×1pic

■For OX-20B

Additional air expansion		For OX-20B Robot side	For OX-20B Tool side
Tool side / Robot side	Order code No.	140296	140297
	TYPE	OX-20BA	OX-20BIA
	Weight	76g	57g

● Attachments : mounting bolt (M4×6) ×2pic

■For OX-35A、60A

Additional air expansion		For OX-35/60 Robot side	For OX-35/60 Tool side
Tool side / Robot side	Order code No.	140342	140343
	TYPE	OX-60AA	OX-60AIA
	Weight	147g	80g

● Attachments : mounting bolt (M4×25) ×2pic

OX-005AA

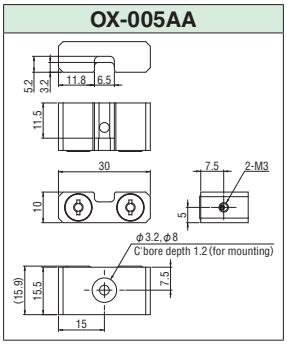

OX-005AIA

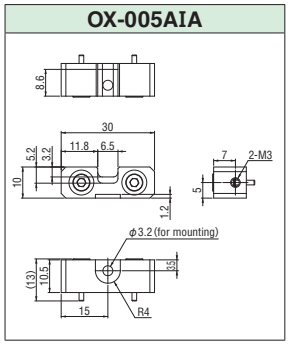

OX-20BA

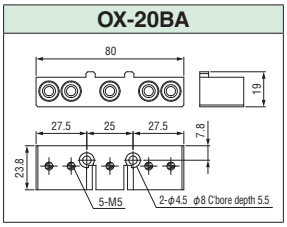

OX-20BIA

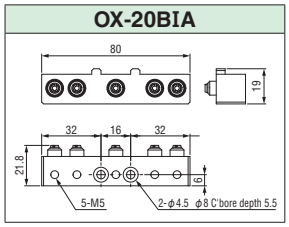

OX-60AA

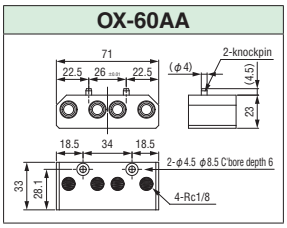

OX-60AIA

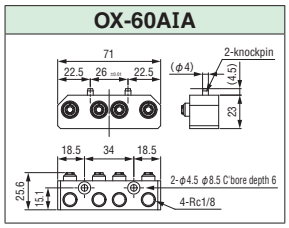

Replacement Parts

Barbed joint		Tool side: For OX-03/05 (NEW)	For OX-10	For OX-20	For OX-35/60	For OX-120A (NEW)
	Order code No.	230117	230116	110623	110686	110739
	TYPE	XL0054-206A	XL0054-106A	LX0004-101	LX0120-202	LX0219-203
	Weight	1g	1g	2g	2g	3.5g

Steel ball *Material:SUS304		Robot side: For OX-005	For OX-03/05/10	For OX-20	For OX-35/60	For OX-120AI (NEW)
	Order code No.	382583	310607	323000	152561	152755
	TYPE	φ3	φ5.5	φ6.35	φ10	φ11
	Weight	1g	1g	1g	3g	5.5g

Coil spring		Robot side: For OX-005	For OX-03/05/10	For OX-20	For OX-35/60	For OX-120A (NEW)
	Order code No.	230115	200223	110649	200257	200320
	TYPE	XL0060-106-2	UR5-10	L00999-420	UR8-15	UR10-10
	Weight	1g	0.1g	0.2g	1g	1g

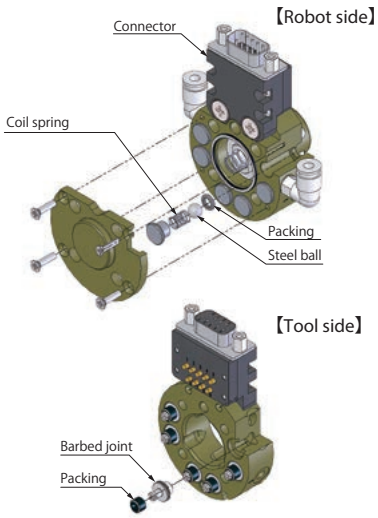

Packing		For OX-005 Robot side (piping)	For OX-005 Robot side (check valve)	For OX-03/05/10 Tool side	For OX-03/05/10 Robot side	For OX-20 Tool side	For OX-20 Robot side	For OX-35/60 Tool side	For OX-35/60 Robot side	For OX-120A (NEW) Tool side	For OX-120A (NEW) Robot side
Tool side: XL0054-204, L00999-313, LX0120-203	Order code No.	152547	186738	230077	271742	110551	184474	110687	152689	221487	131773
Robot side: S6, 1ASS-5, P5、SS3, P8	TYPE	P5 (C000002-S7)	SS3 (C03700-A0)	XL0054-204	1ASS-5	L00999-313	S6 (C00503-A00X8)	LX0120-203	P8 NBR-70	WRBC15-8-3	NPB10
	Weight	1g	1g	0.1g	0.05g	0.2g	0.05g	1g	0.06g	1g	0.1g

Connector Accessories

Connector for OX-005	Robot side	Tool side
Order code No.	140328	140329
TYPE	OXR-PS06	OXR-PS06-I
Weight	3g	
Electric contact	6Pin (2A)	

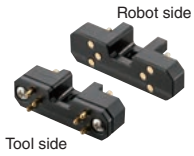

● Connecter drawing ➡ 1-33

D-SUB & Probe connector	Robot side	Tool side
Order code No.	140190	140192
TYPE	OXR-DPS09	OXR-DPS09-I
Weight	25g	
Wiring spceiflcation	AWG22	
Electric contact	9Pin (2A)	
Attached screw	Flat head screw with cross recesse M4×10 [123515]	

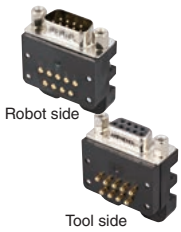

● Connecter drawing ➡ 1-33

Probe connector	Robot side	Tool side
Order code No.	140362	140363
TYPE	OXR-PSH11	OXR-PSH11-I
Weight	53g	
Wiring spceiflcation	solder-fix type (AWG23) 500mm	
Electric contact	11Pin (2A)	
Attached screw	Flat head screw with cross recesse M4×10 [123515]	

● Connecter drawing ➡ 1-33

Probe connector (solder)	Robot side	Tool side
Order code No.	140264	140265
TYPE	OXR-PS16	OXR-PS16-I
Weight	8g	11g
Wiring spceiflcation	AWG22	
Electric contact	16Pin (2A)	
Attached screw	Flat head screw with cross recesse M4×10 [123515]	

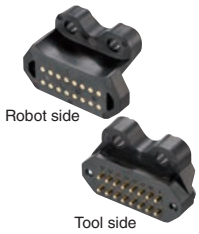

● Connecter drawing ➡ 1-33

D-SUB connector (OX-A type)	Robot side	Tool side
Order code No.	140172	140171
TYPE	OX-DS09	OX-DS09-I
Weight	4g	
Wiring spceiflcation	AWG22	
Electric contact	9Pin	

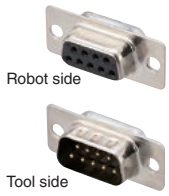

● Screws are not included.

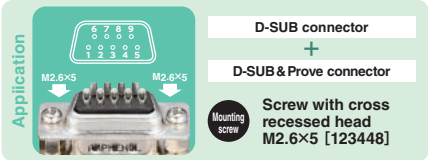

*D-SUB connector can be mounted on cable wiring.

NEW Probe connector 05A	Robot side	Tool side
Order code No.	140393	140395
TYPE	OXR-MPS0508	OXR-MPS0508-I
Weight	225g	195g
Electric contact	8Pin (5A)	
Electrical connector	NJC-2410-RM	NJC-2410-RF
Subject	OX-35 or higher	

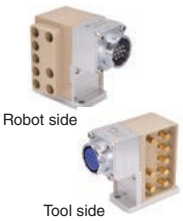

● Connector drawings and aviation connector standards in cable side ➡ Please refer to 1-34

NEW Probe connector 13A	Robot side	Tool side
Order code No.	140394	140396
TYPE	OXR-MPS1304	OXR-MPS1304-I
Weight	240g	215g
Electric contact	4Pin (13A)	
Electrical connector	D/MS3102A-18-10-P	D/MS3102A-18-10-S
Subject	OX-35 or higher	

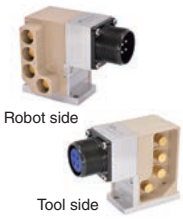

● Connector drawings and aviation connector standards in cable side ➡ Please refer to 1-34

NEW Probe connector mounting spacer	
Order code No.	140397
TYPE	OXR-PCS
Weight	35g
Subject	OX-35

● Connecter drawing ➡ 1-34

Required when attaching the probe connectors 05A, 13A to the OX-35B, OX-35AI .

Probe connector mounting bracket	
Order code No.	140344
TYPE	OXR-CBX24
Weight	33g

● Accessories : positioning pin, mounting bolt ● Connecter drawing ➡ 1-33

Required when attaching D-sub & probe connector to the OX-35B, OX-35AI , OX-35BT, OX-35ATI , OX-120A and OX-120AI .

Auto switch·contactless

Auto switch	
Order code No.	030500
TYPE	D-F8N
Weight	7g

● Applied load : relay PLC ● Load voltage : DC24V
● Load electric current : 5 ~ 40mA ● Wiring : ➡ 6-20
● W/ indicator lamp
● Cable Length : 0.5m

Wireless connector

Can be used for the place with moisture and dust with contactless design

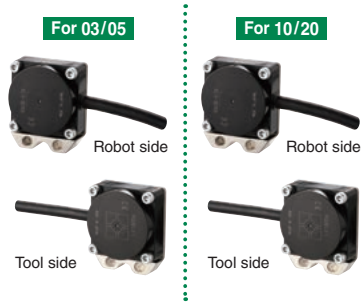

Wireless connector	For 03/05 Robot side	For 03/05 Tool side	For 10/20 Robot side	For 10/20 Tool side
Order code No.	140320	140322	140321	140323
TYPE	OXR-RS04R-03	OXR-RS04T-03I	OXR-RS04R-10	OXR-RS04T-10I
Weight	176g	122g	180g	115g
Drive voltage	12V±1.5VDC	—	12V±1.5VDC	—
Input and output points	4points+1point	4points	4points+1point	4points
Attached screw	Flat head screw with cross recesse M4×14		Flat head screw with cross recesse M4×20	

*Check the specification and precautions concerning handling. ➡ 1-38 *Check the drawing. ➡ 1-35 *For protection structure IP67
*The output type is NPN type. *Power supply voltage DC24V *Cable Length : robot side 2m tool side 1m
*To avoid interference between wireless connectors, no more than 1 wireless connector should be installed per tool changer.

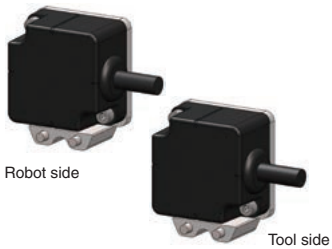

	For 20 Robot side	For 20 Tool side
Order code No.	140330	140379
TYPE	OXR-RS12R-20	OXR-RS12T1-20I
Weight	366g	260g
Drive voltage	12V±1.5VDC	—
Input and output points	12points+1point	12points
Attached screw	Flat head screw with cross recesse M4×10	

*Please be sure to check the specifications and handling precautions. ➡ 1-38 *Please refer to the drawing. ➡ 1-35
*For protection structure IP67
*OXR-RS12 is basically for the tool changer with load capacity 20kg or more. *Power supply voltage DC24V
*Cable Length : robot side 2m tool side 1m *The output type is NPN type.
*To avoid interference between wireless connectors, no more than 1 wireless connector should be installed per tool changer.

Cable Accessories

D-SUB cable (OX-A type)	Robot side	Tool side
Order code No.	140168	140167
TYPE	OX-DS09-H	OX-DS09-I-H
Weight	40g	
Cable length	0.5m	
Electric contact	9Pin	
Wiring speciflcation	Movable cable (AWG22), for UL	

● Bending radius (mm) : R46

Straight type

D-SUB cable for OX (for OX-B)	Robot side		Tool side	
Order code No.	140197	140247	140202	140364
TYPE	OX-DS09S-H	OX-DS09S-H (1.5M)	OX-DS09P-I-H	OX-DS09P-I-H (1.5M)
Weight	60g	138g	60g	140g
Cable length	0.5m	1.5m	0.5m	1.5m
Electric contact	9Pin			
Wiring speciflcation	Movable cable (AWG22), for UL			

● Bending radius (mm) : R46

L type

D-SUB cable for OX (for OX-B)	Robot side (L)		Tool side (L)	
Order code No.	140203	140248	140204	140365
TYPE	OX-DS09SL-H	OX-DS09SL-H (1.5M)	OX-DS09PL-I-H	OX-DS09PL-I-H (1.5M)
Weight	60g	138g	60g	140g
Cable length	0.5m	1.5m	0.5m	1.5m
Electric contact	9Pin			
Wiring speciflcation	Movable cable (AWG22), for UL			

● Bending radius (mm) : R46

Drawing of Probe connector

▶ A Type ／ B Type ／ BN Type (Take-out Robot) ➜ 1-19

OX-DPS09A

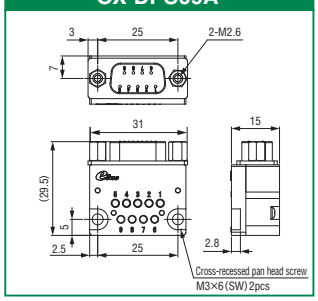

OX-DPS09A-I

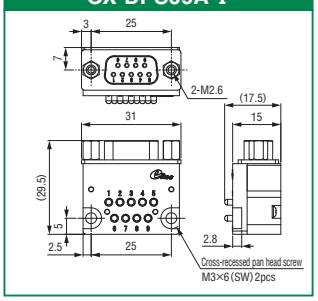

OX-PS15

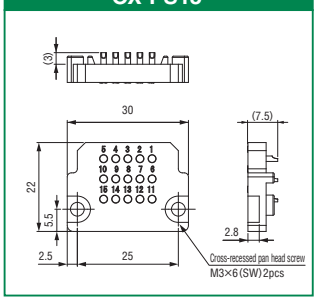

OX-PS15-I

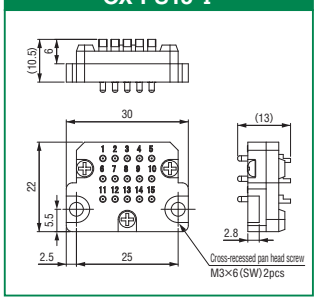

OX-PLA-07

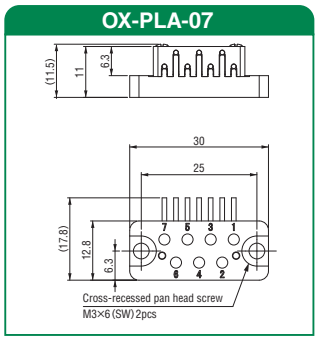

OX-PLA-07-I

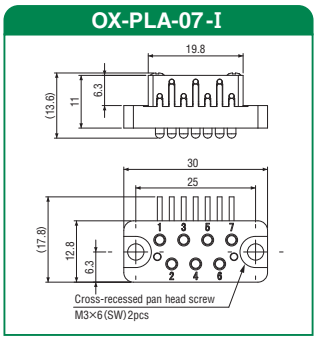

OX-PL09

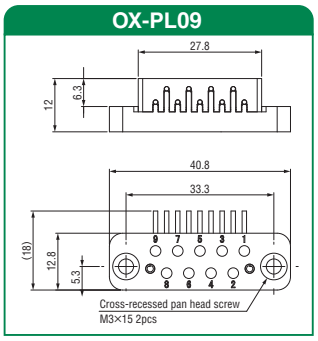

OX-PL09-I

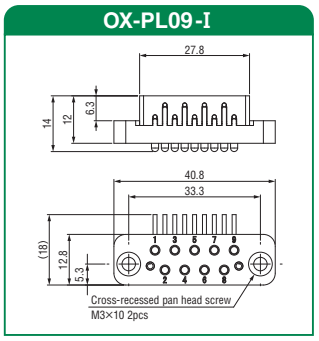

▶ Quick Chuck Change Manual (OM Type) ➜ 1-7 ／ For Articulated Robots ➜ 1-31

OXR-PS06

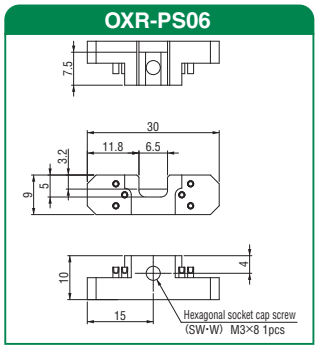

OXR-PS06-I

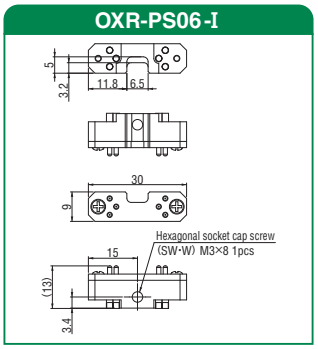

OXR-DPS09

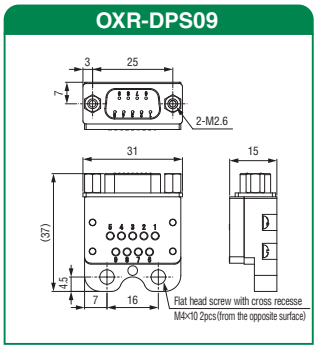

OXR-DPS09-I

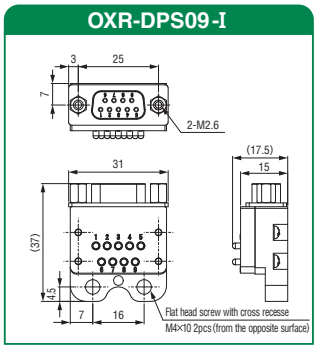

OXR-PSH11

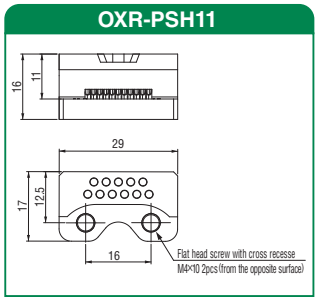

OXR-PSH11-I

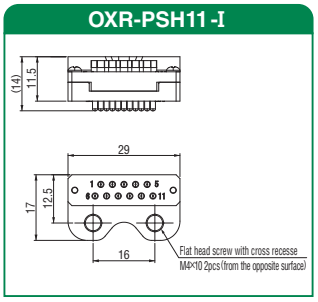

OXR-PS16

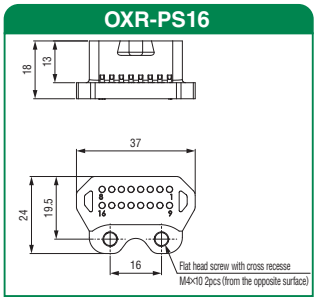

OXR-PS16-I

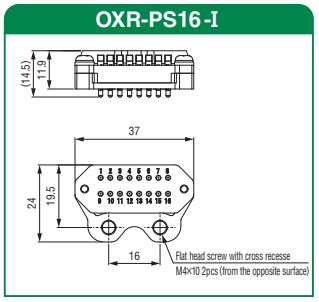

OXR-CBX20

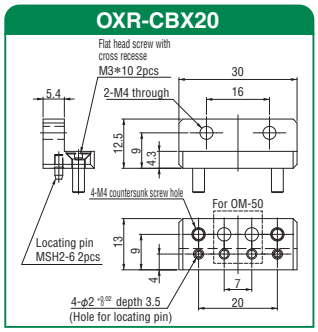

OXR-CBX24

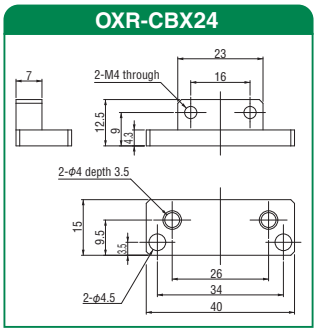

Drawing of Probe connector

▶ For Articulated Robots ➜1-31

5A Robot side

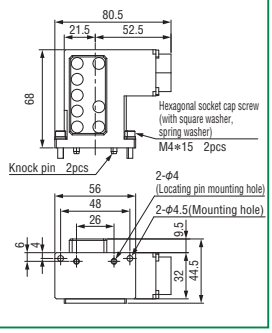

5A Tool side

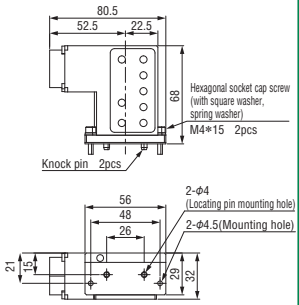

13A Robot side

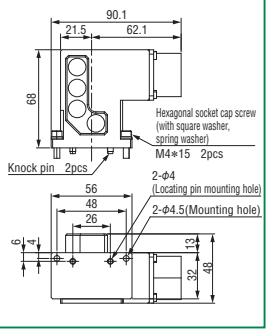

13A Tool side

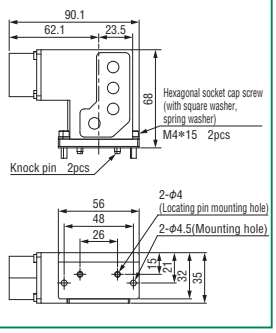

Mounting spacer

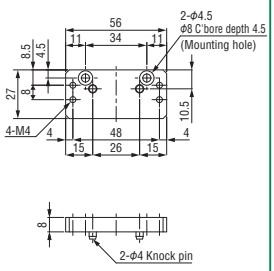

■ List of high capacity connectors

Order code No.	140393	140395	140394	140396
TYPE	OXR-MPS0508	OXR-MPS0508-I	OXR-MPS1304	OXR-MPS1304-I
Rating	5A AC200V/DC200V		13A AC200V/DC200V	
Electric contact	8Pin		4Pin	
Wiring specifications ※ 1	AWG19		AWG15	
Connector shape	Elecectrical connector NJC-2410-RM (NANABOSHI)	Elecectrical connector NJC-2410-RM (NANABOSHI)	Elecectrical connector D/MS3102A-18-10-P (DDK)	Elecectrical connector D/MS3102A-18-10-S (DDK)
Recommended electrical connecor on cable side	NJC-2410-PM (NANABOSHI)	NJC-2410-PF (NANABOSHI)	D/MS3106A-18-10-S (DDK)	D/MS3106A-18-10-P (DDK)
Wiring precautions (check the pin number from combined surface)	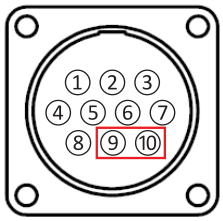	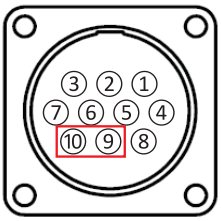	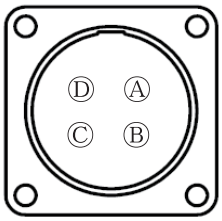	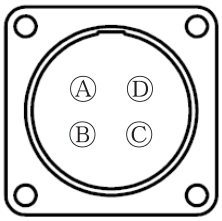
	The electrical connector is 10 pin, but the 9,10 pin are blank, and the power won't be on even if connected.			
Subject tool changer ※ 2	OX-35B (with OXR-PCS) OX-60A OX-120A	OX-35AI (with OXR-PCS) OX-60AI OX-120AI	OX-35B (with OXR-PCS) OX-60A OX-120A	OX-35AI (with OXR-PCS) OX-60AI OX-120AI
Maintenance	Repeated use causes wear powder on the contact surface of the probe pin. The wear powder will cause the temperature rise, so please clean the surface regularly.			

※1 Wiring information in connectors
※2 OXR-PCS(140397)is needed when using large capacity connectors on OX-35B、35AI.

Drawing of Wireless connector

▶ A Type ／ B Type ／ BN Type (Take-out Robot) ➜ 1-19

OX-RS04R-SB

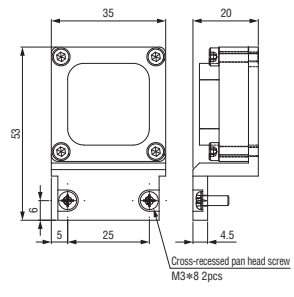

OX-RS04T-SBI

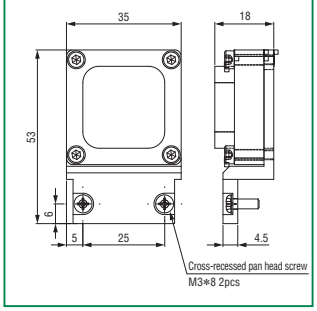

OX-RS12R-LB

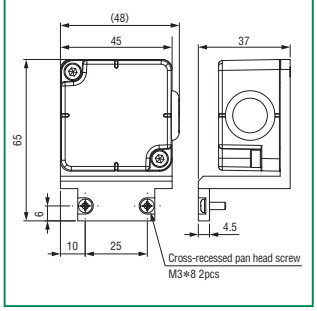

OX-RS12T1-LBI

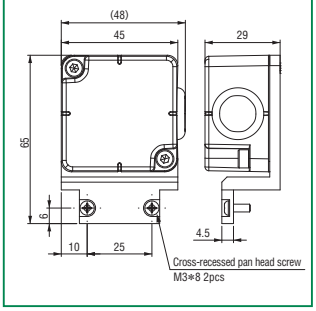

▶ For Articulated Robots ➜ 1-32

OXR-RS04R-03

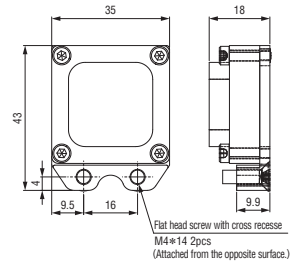

OXR-RS04T-03I

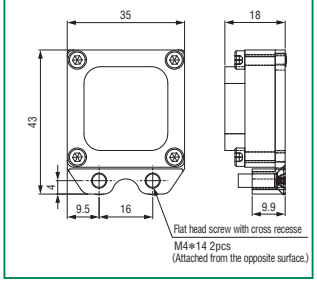

OXR-RS04R-10

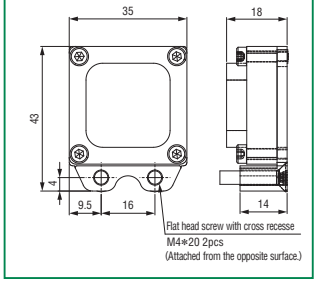

OXR-RS04T-10I

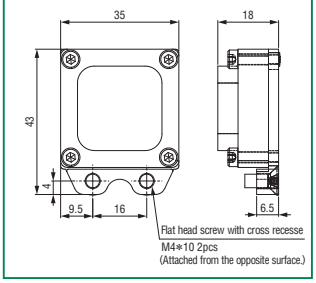

OXR-RS12R-20

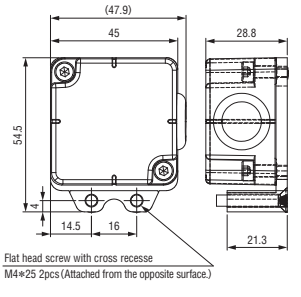

OXR-RS12T1-20I

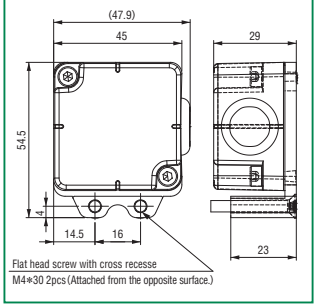

■ OXR-RS04 series Wiring diagram (NPN)

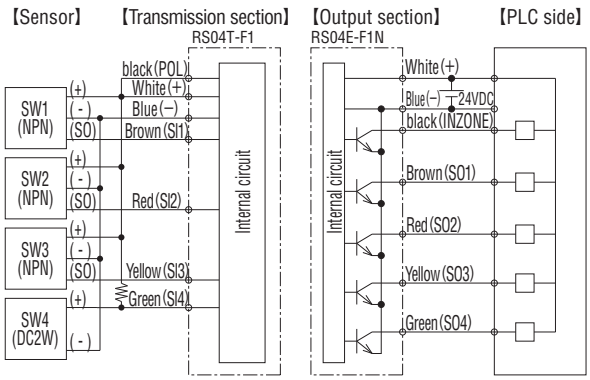

∗ SW4 in the above figure is a wiring example of a DC 2-wire sensor (wire a resistor of about 1 to 2 KΩ).
A DC 3-wire sensor can also be used.

■ OXR-RS12 series Wiring diagram (NPN)

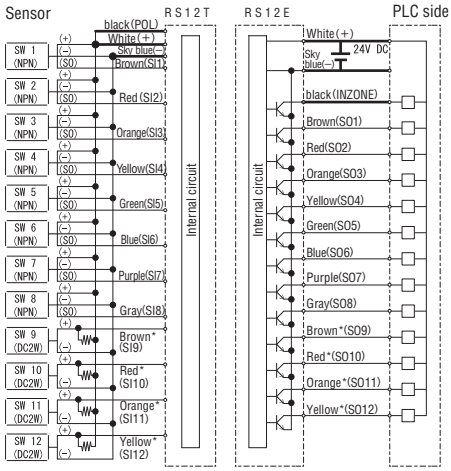

∗ SW9 to 12 in the above figure are wiring examples of the DC 2-wire sensor (wire the resistance to about 1 to 2 KΩ).
∗ The green*, blue*, and purple* cables of RS12E and RS12T are unused

Option & Replacement Parts

			Order code No.	TYPE	Tool changer																			
					Robot side	Tool side	Robot side	Tool side	Robot side	Tool side	Robot side	Tool side	Robot side	Tool side	Robot side	Tool side	Robot side	Tool side	Robot side	Tool side	Robot side	Tool side	Robot side	Tool side
				Order code No.	140310	140315	140235	140236	140237	140238	140262	140263	140292	140293	140398	140316	140313	140318	140399	140317	140373	140374	140314	140319
				TYPE	OX-005A	OX-005AI	OX-03A	OX-03AI	OX-05A	OX-05AI	OX-10B	OX-10BI	OX-20B	OX-20BI	OX-35B	OX-35AI	OX-60A	OX-60AI	OX-35BT	OX-35ATI	OX-120A	OX-120AI	OX-230A	OX-230AI
Air Option	Robot side		140326	OX-005AA	○	—	—	—	—	—	—	—	—	—	—	—	—	—	—	—	—	—	—	—
	Tool side		140327	OX-005AIA	—	○	—	—	—	—	—	—	—	—	—	—	—	—	—	—	—	—	—	—
	Robot side		140296	OX-20BA	—	—	—	—	—	—	—	—	○	—	—	—	—	—	—	—	—	—	—	—
	Tool side		140297	OX-20BIA	—	—	—	—	—	—	—	—	—	○	—	—	—	—	—	—	—	—	—	—
	Robot side		140342	OX-60AA	—	—	—	—	—	—	—	—	—	—	○	—	○	—	○	—	—	—	—	—
	Tool side		140343	OX-60AIA	—	—	—	—	—	—	—	—	—	—	—	○	—	○	—	○	—	—	—	—
Maintenance parts	Barbed joint		230116	XL0054-106A	—	—	—	—	—	—	—	○	—	—	—	—	—	—	—	—	—	—	—	—
			230117	XL0054-206A	—	—	—	○	—	○	—	—	—	—	—	—	—	—	—	—	—	—	—	—
			110623	LX0004-101	—	—	—	—	—	—	—	—	—	○	—	—	—	—	—	—	—	—	—	—
			110686	LX0120-202	—	—	—	—	—	—	—	—	—	—	—	○	—	○	—	○	—	—	—	—
			110739	LX0219-203	—	—	—	—	—	—	—	—	—	—	—	—	—	—	—	—	—	○	—	—
	Steel ball		382583	ϕ3	○	—	—	—	—	—	—	—	—	—	—	—	—	—	—	—	—	—	—	—
			310607	ϕ5.5	—	—	○	—	○	—	○	—	—	—	—	—	—	—	—	—	—	—	—	—
			323000	ϕ6.35	—	—	—	—	—	—	—	—	○	—	—	—	—	—	—	—	—	—	—	—
			152561	ϕ10	—	—	—	—	—	—	—	—	—	—	○	—	○	—	○	—	—	—	—	—
			152755	ϕ11																	○	—	—	—
	Coil spring		230115	XL0060-106-2	○	—	—	—	—	—	—	—	—	—	—	—	—	—	—	—	—	—	—	—
			200223	UR5-10	—	—	○	—	○	—	○	—	—	—	—	—	—	—	—	—	—	—	—	—
			110649	L00999-420	—	—	—	—	—	—	—	—	○	—	—	—	—	—	—	—	—	—	—	—
			200257	UR8-15	—	—	—	—	—	—	—	—	—	—	○	—	○	—	○	—	—	—	—	—
			200320	UR10-10	—	—	—	—	—	—	—	—	—	—	—	—	—	—	—	—	○			
	Packing (Robot side)		152547	P5(C000002-S7)	○	—	—	—	—	—	—	—	—	—	—	—	—	—	—	—	—	—	—	—
			186738	SS3(C03700-A0)	○	—	—	—	—	—	—	—	—	—	—	—	—	—	—	—	—	—	—	—
			271742	1ASS-5	—	—	○	—	○	—	○	—	—	—	—	—	—	—	—	—	—	—	—	—
			184474	S6(C00503-A00X8)	—	—	—	—	—	—	—	—	○	—	—	—	—	—	—	—	—	—	—	—
			152689	P8 NBR-70	—	—	—	—	—	—	—	—	—	—	○	—	○	—	○	—	—	—	—	—
			131773	NPB10	—	—	—	—	—	—	—	—	—	—	—	—	—	—	—	—	—	○	—	—
	Packing (Tool side)		230077	XL0054-204	—	—	—	○	—	○	—	○	—	—	—	—	—	—	—	—	—	—	—	—
			110551	L00999-313	—	—	—	—	—	—	—	—	—	○	—	—	—	—	—	—	—	—	—	—
			110687	LX0120-203	—	—	—	—	—	—	—	—	—	—	—	○	—	○	—	○	—	—	—	—
			221487	WRBC15-8-3	—	—	—	—	—	—	—	—	—	—	—	—	—	—	—	—	—	○	—	—
Cable Accessories	Robot side		140168	OX-DS09-H	—	—	○*1	—	○*1	—	○*1	—	○*1	—	○*1	—	○*1	—	○*1	—	○*1	—	○*1	—
	Tool side		140167	OX-DS09-I-H	—	—	—	○*1	—	○*1	—	○*1	—	○*1	—	○*1	—	○*1	—	○*1	—	○*1	—	○*1
	Robot side		140197	OX-DS09S-H	—	—	○*1	—	○*1	—	○*1	—	○*1	—	○*1	—	○*1	—	○*1	—	○*1	—	○*1	—
			140247	OX-DS09S-H(1.5m)	—	—	○*1	—	○*1	—	○*1	—	○*1	—	○*1	—	○*1	—	○*1	—	○*1	—	○*1	—
	Tool side		140202	OX-DS09P-I-H	—	—	—	○*1	—	○*1	—	○*1	—	○*1	—	○*1	—	○*1	—	○*1	—	○*1	—	○*1
			140364	OX-DS09P-I-H(1.5m)	—	—	—	○*1	—	○*1	—	○*1	—	○*1	—	○*1	—	○*1	—	○*1	—	○*1	—	○*1
	Robot side		140203	OX-DS09SL-H	—	—	○*1	—	○*1	—	○*1	—	○*1	—	○*1	—	○*1	—	○*1	—	○*1	—	○*1	—
			140248	OX-DS09SL-H(1.5m)	—	—	○*1	—	○*1	—	○*1	—	○*1	—	○*1	—	○*1	—	○*1	—	○*1	—	○*1	—
	Tool side		140204	OX-DS09PL-I-H	—	—	—	○*1	—	○*1	—	○*1	—	○*1	—	○*1	—	○*1	—	○*1	—	○*1	—	○*1
			140365	OX-DS09PL-I-H(1.5m)	—	—	—	○*1	—	○*1	—	○*1	—	○*1	—	○*1	—	○*1	—	○*1	—	○*1	—	○*1
Connector Accessories	Robot side		140328	OXR-PS06	○	—	—	—	—	—	—	—	—	—	—	—	—	—	—	—	—	—		
	Tool side		140329	OXR-PS06-I	—	○	—	—	—	—	—	—	—	—	—	—	—	—	—	—	—	—		
	Robot side	★	140190	OXR-DPS09	—	—	○	—	○	—	○	—	○	—	○*2	—	○	—	○*2	—	○*2	—	○*2	—
	Tool side		140192	OXR-DPS09-I	—	—	—	○	—	○	—	○	—	○	—	○*2	—	○	—	○*2	—	○*2	—	○*2
	Robot side		140264	OXR-PS16	—	—	○	—	○	—	○	—	○	—	○*2	—	○	—	○*2	—	○*2	—	○*2	—
	Tool side		140265	OXR-PS16-I	—	—	—	○	—	○	—	○	—	○	—	○*2	—	○	—	○*2	—	○*2	—	○*2
	Robot side		140362	OXR-PSH11	—	—	○	—	○	—	○	—	○	—	○*2	—	○	—	○*2	—	○*2	—	○*2	—
	Tool side		140363	OXR-PSH11-I	—	—	—	○	—	○	—	○	—	○	—	○*2	—	○	—	○*2	—	○*2	—	○*2
	Probe connector Mounting bracket		140344	OXR-CBX24	—	—	—	—	—	—	—	—	—	—	○	○	—	—	○	○	○	○	○	○
	Robot side		140172	OX-DS09	—	—	○*1	—	○*1	—	○*1	—	○*1	—	○*1	—	○*1	—	○*1	—	○*1	—	○*1	—
	Tool side		140171	OX-DS09-I	—	—	—	○*1	—	○*1	—	○*1	—	○*1	—	○*1	—	○*1	—	○*1	—	○*1	—	○*1
Auto switch			030500	D-F8N	—	—	—	—	—	—	—	—	○	—	○	—	○	—	○	—	○	—	○	—
Wireless connector	Robot side		140320	OXR-RS04R-03	—	—	○	—	○	—	—	—	—	—	—	—	—	—	—	—	—	—		
	Tool side		140322	OXR-RS04T-03I	—	—	—	○*3	—	○*3	—	—	—	—	—	—	—	—	—	—	—	—		
	Robot side		140321	OXR-RS04R-10	—	—	—	—	—	—	○	—	○	—	○*2	—	○	—	○*2	—				
	Tool side		140323	OXR-RS04T-10I	—	—	—	—	—	—	—	○	—	○	—	○*2	—	○	—	○*2				
	Robot side		140330	OXR-RS12R-20	—	—	—	—	—	—	—	—	○*3	—	○*2	—	○	—	○*2	—				
	Tool side		140331	OXR-RS12T1-20I	—	—	—	—	—	—	—	—	—	○*3	—	○*2·3	—	○*3	—	○*2·3				
High capacity connectors	Robot side		140393	OXR-MPS0508	—	—	—	—	—	—	—	—	—	—	○*4	—	○*4	—	—	—	○*4	—	○*4	—
	Tool side		140395	OXR-MPS0508-I	—	—	—	—	—	—	—	—	—	—	—	○*4	—	○*4	—	—	—	○*4	—	○*4
	Robot side		140394	OXR-MPS1304	—	—	—	—	—	—	—	—	—	—	○*4	—	○*4	—	—	—	○*4	—	○*4	—
	Tool side		140396	OXR-MPS1304-I	—	—	—	—	—	—	—	—	—	—	—	○*4	—	○*4	—	—	—	○*4	—	○*4
Probe connector mounting spacer			140397	OXR-PCS	—	—	—	—	—	—	—	—	—	—	○	○	—	—	—	—	—	—	—	—

＊1 If you use a cable accessory with no connector, you will need the proper D-sub & probe connectors (★ mark).
＊2 The probe connector mounting bracket (140344) is required for the installation of the electrical connector.
＊3 Because of the thickness of the wireless connector, it will come out from the mounting surface of the tool changer, please confirm the dimension.
＊4 Probe connector mounting spacer is needed when mounting the connector.

			Air option				
			Robot side	Robot side	Tool side	Robot side	Tool side
		Order code No.	140326	140296	140297	140342	140343
		Order code No. / TYPE	OX-005AA	OX-20BA	OX-20BIA	OX-60AA	OX-60AIA
Maintenance parts	Barbed joint	110623 LX0004-101	—	—	○	—	—
		110686 LX0120-202	—	—	—	—	○
	Steel ball	382583 ϕ3	○	—	—	—	—
		323000 ϕ6.35	—	○	—	—	—
		152561 ϕ10	—	—	—	○	—
	Coil spring	230115 XL0060-106-2	○	—	—	—	—
		110649 L00999-420	—	○	—	—	—
		200257 UR8-15	—	—	—	○	—
	Packing (Robot side)	152547 P5(C000002-S7)	○	—	—	—	—
		186738 SS3(C03700-A0)	○	—	—	—	—
		184474 S6(C00503-A00X8)	—	○	—	—	—
		152689 P8 NBR-70	—	—	—	○	—
	Packing (Tool side)	110551 L00999-313	—	—	○	—	—
		110687 LX0120-203	—	—	—	—	○

OX-005A/005AI

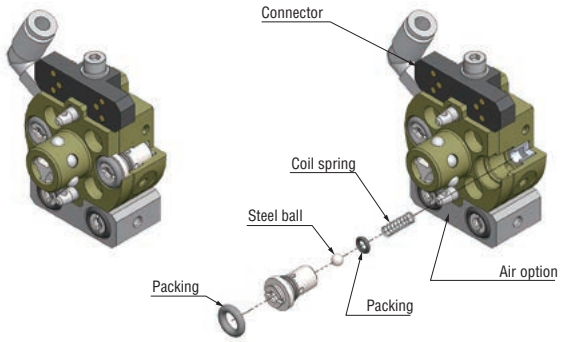

OX-03A(05A、10B)/03A(05A、10B)I

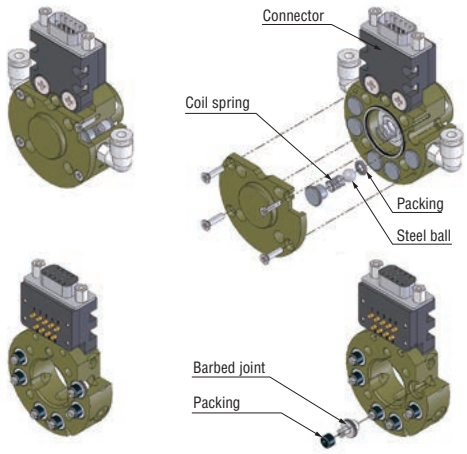

OX-20B/20BI

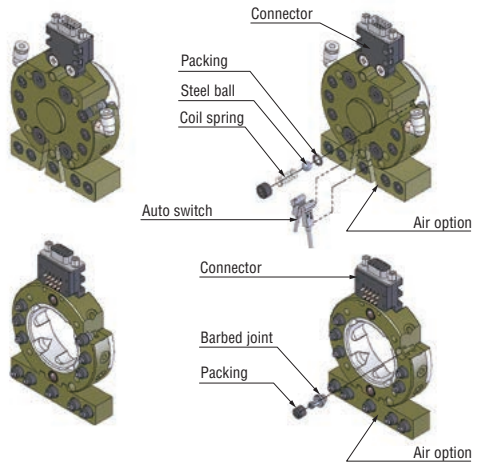

OX-35B(60A)/35A(60A)I

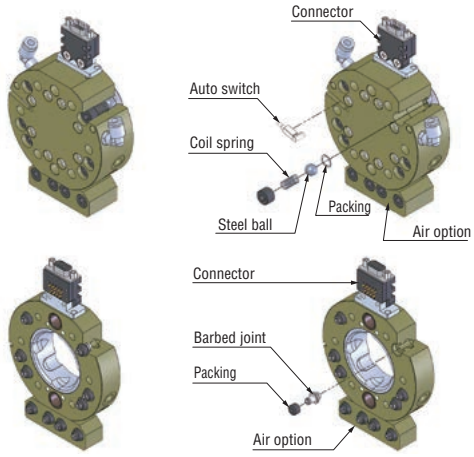

Wireless connector specification and precautions concerning handling

● See (1-19) and (1-32) for more information about wireless connector.

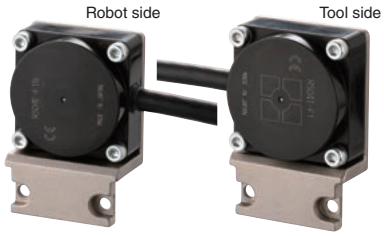

▶ Cautions in installation (Please be sure to read before use.)

Please read this manual well to gain a thorough understanding of the contents to make safe and proper operation.

- Make installation / maintenance / measures at the failure after you turn off the power.
- Please use constant voltage power supply such as switching power supply.
  (Malfunction may occur if you use the power with ripple of more than the rated value such as full wave rectifying power.)
- Carry out wiring of each unit properly according to the wiring diagram.
- Carry out wiring of cable well away from power line and high voltage apparatus to prevent malfunction caused by induction noise.
- Be careful not splash organic solvent and such liquid on case and transmission face if they are made of resin (ABS or ABS +PBT).
- Be careful not splash water and cutting water on the cable end (wiring section).
  (Liquid penetration from cable core to the main body may cause problems such as short circuit and corrosion.)
- Install the output section not always faced with metal. Metal section may be overheated or internal element may be damaged.
- To avoid interference between wireless connectors, no more than 1 wireless connector should be installed per tool changer.

▶ 4 contact specification

■ Specification

TYPE	Tool side OXR-RS04T-_ _I	
Sensor	Direct current three-wire sensor	
Drive voltage	12V±1.5V DC	
No. of input signals	4 points	
Drive voltage	≦30mA	≦60mA
Transmission distance	0...3mm	0...2mm
Allowable axis misalignment	±2mm	±1mm
Ambient temperature	0...+50℃	
Protection structure	IP67	
Connection cable	PUR φ 6.3 7x0.259mm²	
Material	ABS	
Weight	Main body 25g + Cable 60g/m	

TYPE NPN output	Robot side OXR-RS04R-_ _
Power supply voltage	24V DC±10% (ripple included)
Current consumption	≦ 200mA
No. of input signals	4 points + 1 point
Load electric current	≦ 50mA/1 Output
LED display	Status (green), in-zone (orange)
Circuit protection	Short-circuit protection, reverse connection protection surge protection
Ambient temperature	0...+50℃
Protection structure	IP67
Connection cable	PUR φ 6.3 7x0.259mm²
Material	ABS
Weight	Main body 25g + Cable 60g/m

*Total current consumption value of each sensor should be less than the drive current value to use two or more sensors for detection.
*Decrease the number of connected sensors if the actual value exceeds the drive current value.

■ Allowed sensors

Power supply voltage	12V DC
Total consumption current	≦60mA
Residual voltage	≦3.5V
Load electric current	—

Use the sensor properly operates under the condition of above list.

■ Transmission area drawing

(Example : power supply voltage 24V/metal not imbedded)

OXR-RS04R-_ _ / OXR-RS04T-_ _I

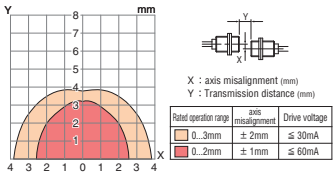

▶ 12 contact specification

■ Specification

TYPE	Tool side OXR-RS12T-_ _I
Sensor	Direct current three-wire sensor
Drive voltage	12V±1.5V DC
No. of input signals	12 points
Drive voltage	≦230mA
Transmission distance	2...5mm
Allowable axis misalignment	±3mm
Ambient temperature	0...+50℃
Protection structure	IP67
Connection cable	PUR φ 8.6 2×0.5mm²+13×0.18mm²
Material	ABS
Weight	Main body 75g + Cable 105g/m

TYPE NPN output	Robot side OXR-RS12R-_ _
Power supply voltage	24V DC±10% (ripple included)
Current consumption	≦ 600mA
No. of output signals	12+1(status)
Load electric current	≦ 50mA/1 出力
LED display	Status (green), Output (orange)
Allowable axis misalignment	Short-circuit protection, reverse connection protection surge protection
Ambient temperature	0...+50℃
Protection structure	IP67
Connection cable	PUR φ 8.6 2×0.5mm²+13×0.18mm²
Material	ABS
Weight	Main body 80g + Cable 105g/m

*Total current consumption value of each sensor should be less than the drive current value to use two or more sensors for detection.
*Decrease the number of connected sensors if the actual value exceeds the drive current value.

■ Allowed sensors

Power supply voltage	12V DC
Total consumption current	≦230mA
Residual voltage	≦3.5V
Load electric current	—

Use the sensor properly operates under the condition of above list.

■ Transmission area drawing

(Example : power supply voltage 24V/metal not imbedded)

OXR-RS12R-_ _ / OXR-RS12T-_ _I

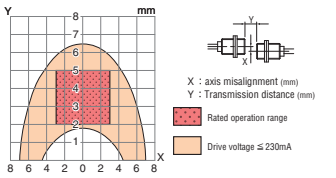

Cautions when using tool changer

- Tool clamp / unclamp will cause tool pull and push. Please watch out for pinch point fingers / hands.
- To prevent equipment troubles, use clean air that has been dried through a dryer or mist separator and is free of oil. For the compressor, replace the hydraulic oil specified by each manufacturer at specified intervals. Inappropriate hydraulic oil may damage air equipment such as packing due to oil mixed in the air.
- Do not use the clamp / unclamp of tool changer rather than air supply of 0.5 to 0.7 MPa. There is a risk of damaging the tool changer mechanism and surrounding devices.
- When not using for prolong periods, please remove tool from robot.
- When restarting from the state that the air is not supplied, please make sure that the air is supplied to the clamp side , then start confirm air supply port.
- When assembling the tool changer to the robot or the hand, please fasten the surface so that there is no gap between the mounting surfaces where there are fixing holes and screw.
- We do not take any responsibility for any faults arising in the combination with improper product.

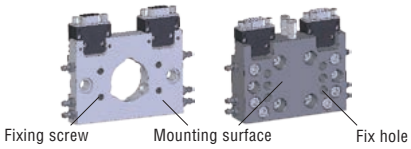

- If the robot side piston is repeatedly clamped / unclamped with the tool side of the tool changer disconnected, it may interfere with the clamping with the tool side, so please stop. If the piston is misaligned, align the △ mark.
- When using the air port for vacuum line, please remove the check valve on the robot side.
- If you would like restore the air port that is used for vacuum line, please assemble with the check valve parts coil spring, stainless ball and packing
- Please note that if the plug is tightened too much, it cannot be clamped normally and may come off.
- Before you start the operation of the assembled equipment, please do the safety-check to confirm the bolts and other parts are not loosen. Do not exceed the allowable value (moment torque) load of the product when using It may not only affects the function and life span of the product, but also causes an unexpected accident. Not only does it affect the function and life of the product, it can also cause unexpected accidents.
- As to the installment of the additional air option, please adjust the concave part of the main body and the convex part of the additional air option, and make it parallel to the connecting surface with the other side.
- If the electrical connector is installed, please make sure the electrical power is OFF during the tool changer clamp / unclamp process. If it is operated with power is on, the front of the probe pin will erode, and poor contact or melt may happen.
- Never connect the electrical power tool changer itself. It might cause electrical shock which lead to the product damage. There is a risk of electric shock and the product may be damaged due to a short circuit.
- It shall not be used in any of the following locations
  - Locations with ambient temperature lower than 0°C or higher than 55°C
  - Locations with liquid, dripping water, water vapor
  - Locations with humidity is more than 95% or condensation
  - Locations with corrosive gases
  - Locations with metal, carbon or spatter conductive dust
  - Locations with a strong electric field magnetic field

Reference Piping connection diagram

With two-position single

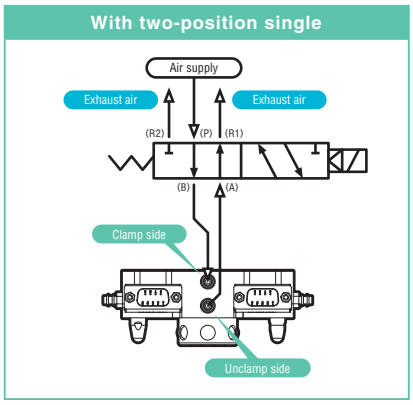

With two-position double

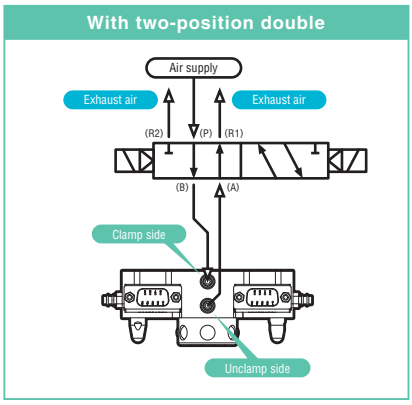

Automated Chuck Exchange System

'Shorten the setup time', 'Reduce the burden of the worker', 'Reduce the connection mistake' by automated robot exchange, will improve the productivity and quality.

Example of tool station

Tool station types : floorstanding tree type, NT type (attached to traverse rail). Stations are created according to the number of setup changes and facility spaces.

＊Please contact our sales office nearest your office or Eins.

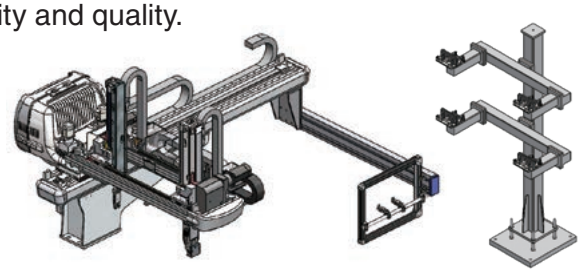

Auto Quick Chuck Change Hanger

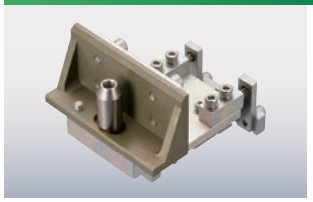

Hanger unit attached to tool station. (Station Side)

1-41

Hanger Tool

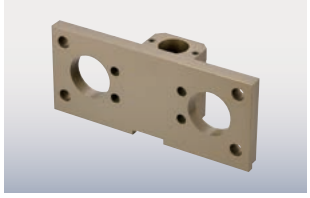

Hold unit attached to the tool side.

1-41

Magnet Chuck Hanger (Fix Side)

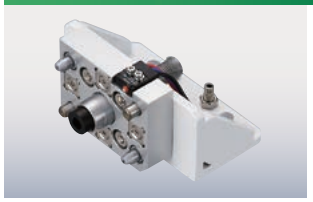

Hanger unit to use and hold the magnet power of Neodymium. (Station Side)

1-42

Magnet Chuck Hanger (Tool Side)

Hold unit attached to the tool side.

1-42

Action example

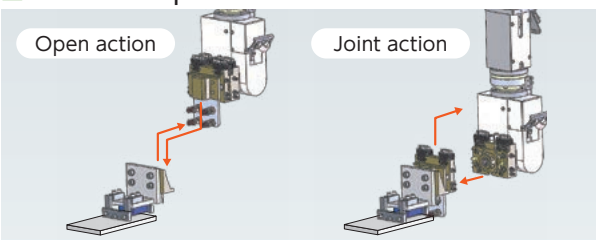

For the holding pin of the replacement hanger, insert the holding pin of the hanger tool and hold the chuck.

Action example

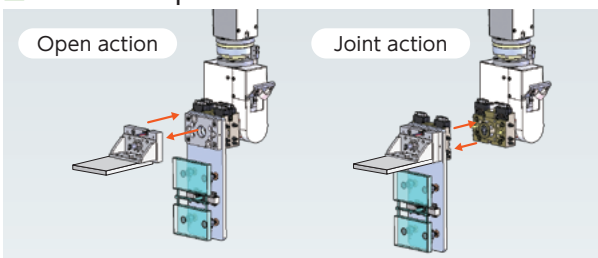

Holds the chuck by neodymium magnet.

Specification

	Product name	Order code No. / TYPE	Weight (g)	Weight capacity (kg)	Page of details
Auto Quick Robot hand Change Hanger		072600 / HSL	182	～3	1-41
		072601 / HSAL	1,300	～10	
		072602 / HLAL	2,800	～35	
Hanger tool		196532 / TS	43	～3	1-41
		196533 / TSA	99	～10	
		196656 / TLA1	356	～35	

	Product name	Order code No. / TYPE	Weight (g)	Weight capacity (kg)	Page of details
Magnet chuck Hanger (fix side)		072732 / HNE-48	540	～1 (9.8N)	1-42
		072733 / HNE-S	680		1-43
		072811 / HNE-SL	632		
Magnet chuck Hanger (tool side)		196636 / TNE-48I	70	～1 (9.8N)	1-42
		196637 / TNE-SI	140		1-43
		196727 / TNE-SLI	115		

Auto Quick Chuck Change Hanger / Hanger Tool

Auto quick robot hand change hanger attached to station side. And hanger tool attached to tool side.

Auto quick chuck change hanger
(Hook Specification)

You can see moving images of products by using QR code reader of your smartphone.

▶ Station side

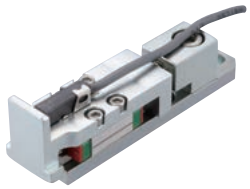

Auto quick chuck change hanger

Order code No.	072600
TYPE	HSL

- Weight: 182g
- Weight capacity: ～3kg
- The chuck has a risidual sensor (E2S-Q13)

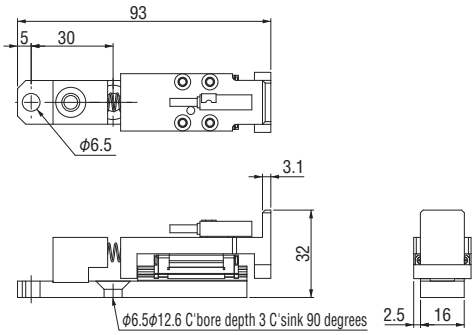

▶ Tool side

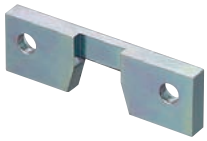

Hanger tool

Order code No.	196532
TYPE	TS

- Weight: 43g
- Weight capacity: ～3kg

Example of combination: HSL and TS

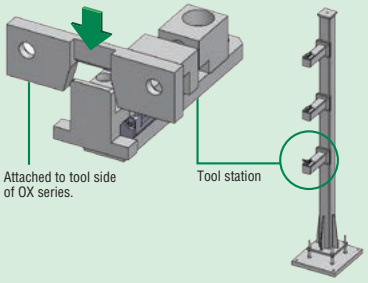

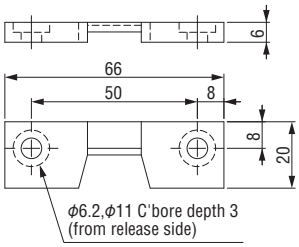

▶ Station side

Auto quick chuck change hanger

Order code No.	072601
TYPE	HSAL

- Weight: 1,300g
- Weight capacity: ～10kg
- The chuck has a risidual sensor (E2E-S05S12-WC-C1)
- Detects sensor with mounting bolt of hanger tool.

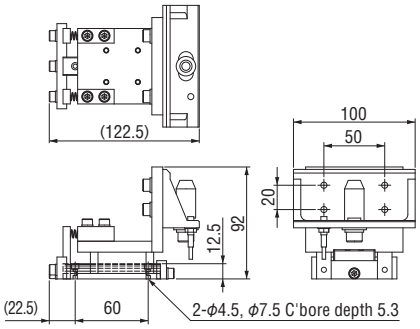

▶ Tool side

Hanger tool

Order code No.	196533
TYPE	TSA

- Weight: 99g
- Weight capacity: ～10kg

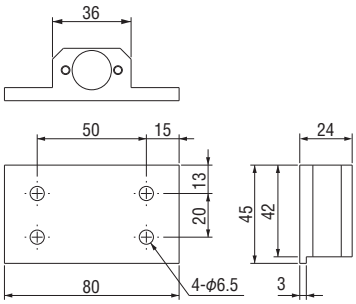

▶ Station side

Auto quick chuck change hanger

Order code No.	072602
TYPE	HLAL

- Weight: 2,800g
- Weight capacity: ～35kg
- The chuck has a risidual sensor (E2S-W21)
- Detects sensor with mounting bolt of hanger tool.

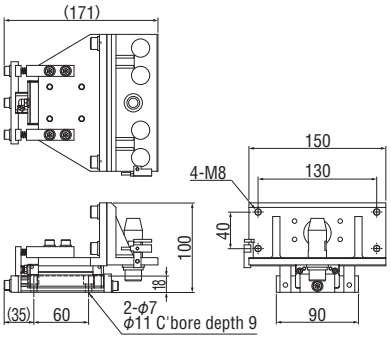

▶ Tool side

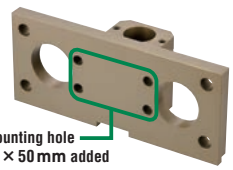

Hanger tool

Order code No.	196656
TYPE	TLA1

- Weight: 356g
- Weight capacity: ～35kg

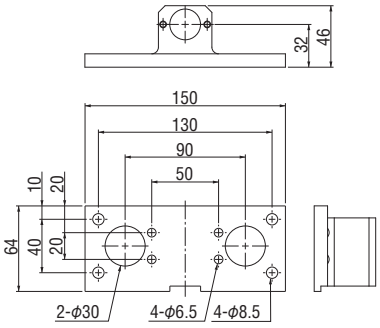

Magnet Chuck Hanger

Perfect hanger unit for hand holding.

Auto quick chuck change hanger
(Neodymium specification)

You can see moving images of products by using QR code reader of your smartphone.

Magnet chuck hanger doesn't use electricity or air, and holds the hand with neodymium magnet.

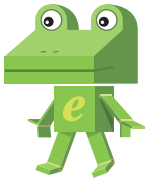

Example of use

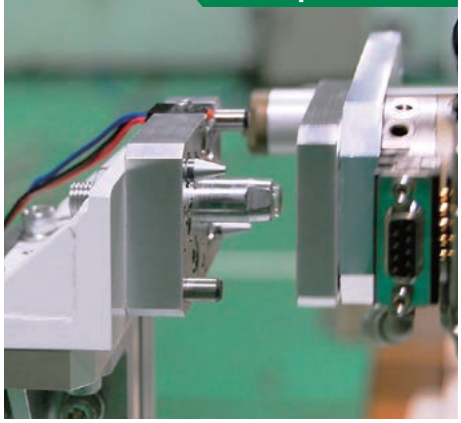

Chuck open

- Using the detachment mechanism of the tool changer, push the tool to the magnetic chuck hanger (fixed side), hold the chuck with the neodymium magnet.

Chuck connection

- With the clamp operation of tool changer, pull the chuck from magnet hanger.

▶ Station side

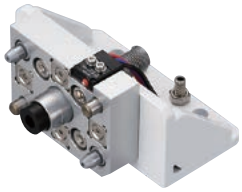

Magnet chuck hanger (fixed side)

Order code No.	072732
TYPE	HNE-48

- Weight : 540g
- Weight capacity : ～ 1kg (9.8N)
- The chuck has a risidual sensor (030317 D2JW-011-MD)
- Wiring : black (COM) blue (NO) red (NC)

▶ Tool side

Magnet chuck hanger (tool side)

Order code No.	196636
TYPE	TNE-48I

- Weight : 70g
- Weight capacity : ～ 1kg (9.8N)

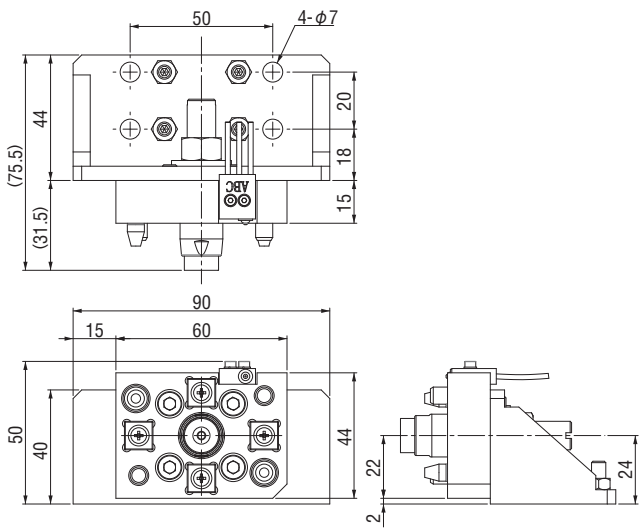

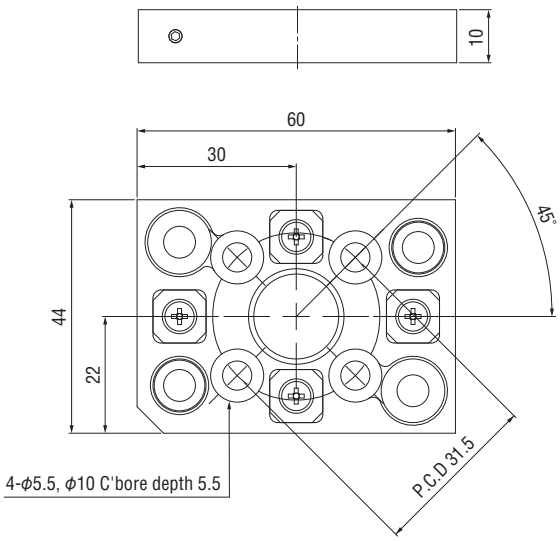

▶ Station side

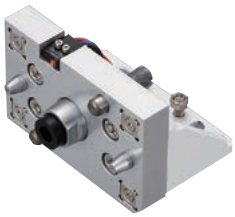

Magnet chuck hanger (fix side)

Order code No.	072733
TYPE	HNE-S

- Weight: 680g
- Weight capacity: ～1kg (9.8N)
- The chuck has a risidual sensor (030317 D2JW-011-MD)
- Wiring: black (COM) blue (NO) red (NC)

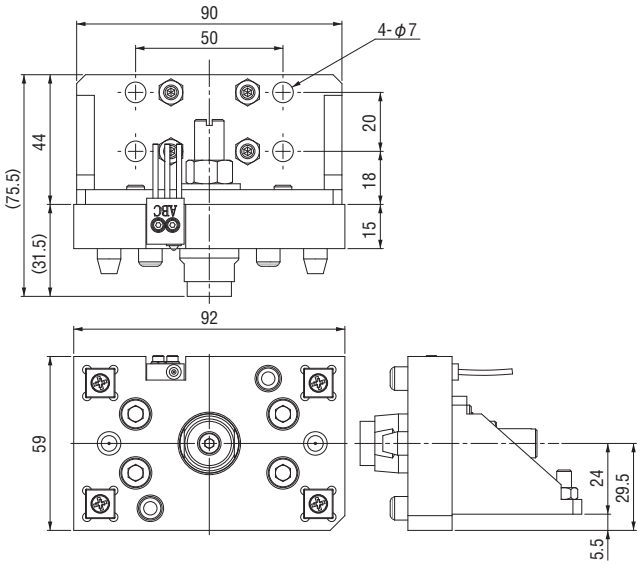

▶ Tool side

Magnet chuck hanger (tool side)

Order code No.	196637
TYPE	TNE-SI

- Weight: 140g
- Weight capacity: ～1kg (9.8N)

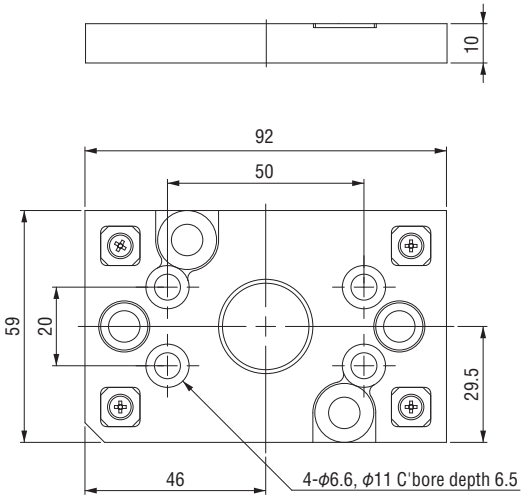

▶ Station side

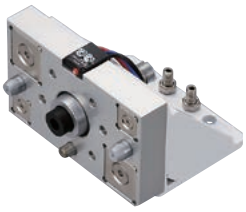

Magnet chuck hanger (fix side)

Order code No.	072811
TYPE	HNE-SL

- Weight: 632g
- Weight capacity: ～1kg (9.8N)
- The chuck has a risidual sensor (030317 D2JW-011-MD)
- Wiring: black (COM) blue (NO) red (NC)

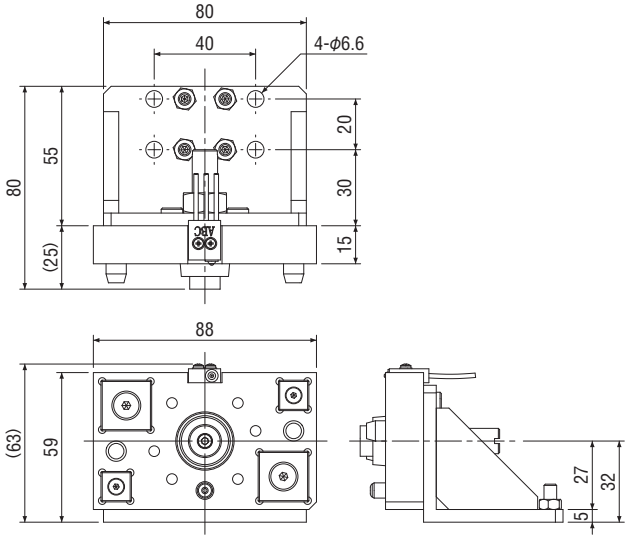

▶ Tool side

Magnet chuck hanger (tool side)

Order code No.	196727
TYPE	TNE-SLI

- Weight: 115g
- Weight capacity: ～1kg (9.8N)

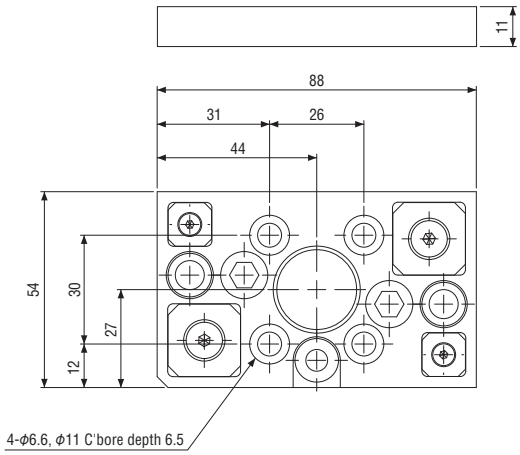

MEMO